L-SERIES

SKIDDERS

JOHN DEERE

640L / 648L / 748L / 848L / 948L

SERIOUSLY PRODUCTIVE

OUTRUN
EXPECTATIONS.
848L

BUILT FOR THE EXTREME

For big-time reliability.

Outboard-Extreme™ axles are the most rugged axles we've ever put to work in the woods. Designed with larger components to deliver maximum jobsite durability, and with a heavier weight to boost machine stability, Outboard-Extreme axles are standard on the 848L and 948L, optional on the 748L (not available on the 640L and 648L).

UP TO THE CHALLENGE

Won’t back down. Or let you down.

In the forest, uptime is the name of the game. And our L-Series Skidders aren’t interested in playing nice.

Extended axle life

L-Series models feature a pressurized continuous-lube system and independent axle filters that extend wear life up to 15,000 hours.* Axle oil-pressure monitoring alerts the operator if a leak occurs.

Straight bushings with grease-thru pins

Straight bushings at all grapple, arch, boom, and blade joints deliver long, trouble-free life and can be quickly replaced when needed. Grease-thru pins balance lubrication and are more resistant to dust, rust, and debris.

Durable, easy-to-service components

Beefy roller-bearing articulation joint helps ensure longer life. Boom-arch hoses are routed inside the arch, for maximum protection and ready repair access.

Streamlined electrical system

Limited relays and switches make quick work of electrical system troubleshooting and maintenance using diagnostic software.

Durable drivetrain

A constant engine speed boosts superb multifunction performance and dependability. It also eliminates sudden surges and engine overspeed, reducing component wear and extending engine life. The 640L, 648L, and 748L feature high-performance 6.8L diesels, while the 848L and 948L run powerful 9.0L engines.

Tough grapples

Grapple design features box-style tongs for maximum strength and harder wear surfaces for long life. Components are easy to access, simplifying service.

*Not applicable to machines with dual-tire configurations.

POWER WHEN YOU NEED IT

Continuously Variable Transmission (CVT) and drivetrain.

Easy-to-use CVT transmission combines the smoothness and operating ease of a hydrostatic transmission with the fuel efficiency of a lockup torque converter.

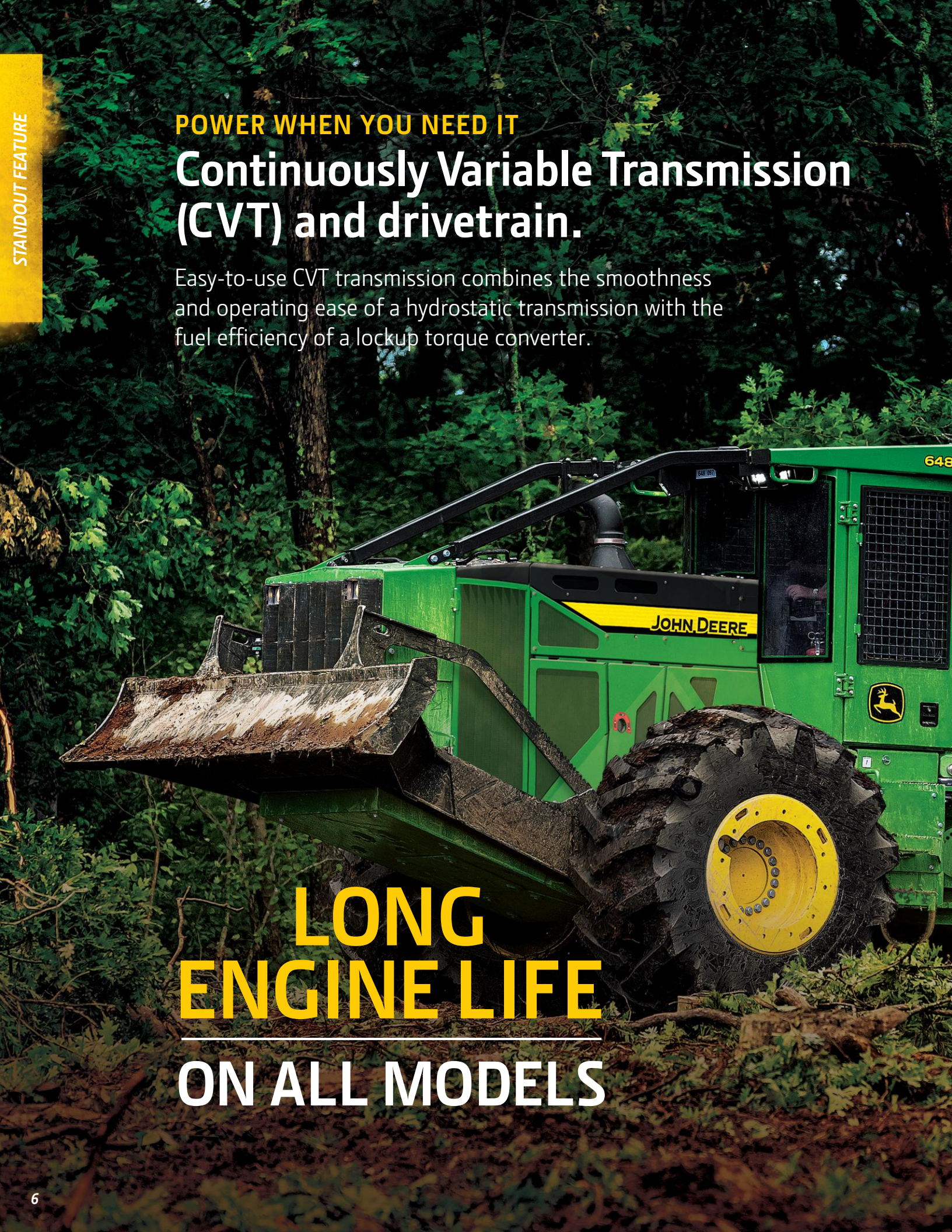

LONG ENGINE LIFE

ON ALL MODELS

Long-term durability and impressive fluid economy

CVT transmission enables a constant engine speed, reducing engine wear while providing excellent fluid economy. Proven components, simplified electronics, and internally routed hoses further bolster durability.

Easy to operate

No more shifting — or "shift shocks" due to surging rpm. Simply set the maximum speed and let the transmission do the rest. Configurable speed ranges eliminate the need to hunt for the correct gear, shortening the learning curve for new operators while helping experienced pros maximize productivity.

Power to the ground

CVT automatically senses the load, delivering more torque and tractive effort as needed to maintain the desired speed.

Optimal engine speed

Engine speed remains at a constant 1,800 rpm, allowing consistent multifunction performance and lower fuel consumption.

DRAG MORE WOOD

All business.

L-Series Skidders reliably deliver power, stability, and performance — for the productivity you need to stay on top of your game.

More grapple choices

With multiple grapple options available for each L-Series model — up to a massive 22.3 sq. ft. on the 948L — you have more flexibility to configure your skidder to best match the application. Arch design provides a better view to bunches, for more efficient loading.

Power and stability

L-Series machines combine impressive horsepower and power-to-weight ratio with a constant engine speed — for superb responsiveness and maximum efficiency. Better machine balance optimizes pulling power, while improving stability when climbing hills, navigating adverse terrain, or hauling bigger payloads.

Independent axle diff lock

Engage all four tires, or just the front two or rear two as needed, to maneuver over tough terrain or out of tight spots.

Easy EH controls

Electrohydraulic (EH) controls provide one-of-a-kind operating ease and smooth control, for faster combined-function cycle times.

*Difference tested: 6-dB(A) on EPA Final Tier 4 (FT4)/EU Stage IV machines; 4-dB(A) on Interim Tier 4/Stage IIIB and Tier 3/Stage IIIA machines.

OPERATE IN QUIET COMFORT

Strong, silent type.

Your operators can go quietly about their business with less fatigue in the cab of an L-Series Skidder. Designed by loggers for loggers, fatigue-beating creature comforts include a more efficient HVAC system, improved ergonomic controls, and plenty of storage space. Joystick steering and an optional rotating seat reduce strain on your back and neck. The equation is simple — more comfort equals more productivity.

Effortless operation

Armrest-mounted electro-hydraulic controls provide fingertip control of all machine functions and turn with you in the optional rotating seat. Joystick steering is smooth and responsive, providing intuitive, low-effort control of steering, direction, and ground speed

Rotating seat

Opt for a rotating high-back seat with joystick steering to improve rearward visibility to the grapple and minimize neck strain.

With you in the woods

Maximize efficiency and productivity with the easily customizable TimberNavi™ jobsite mapping system. Accessible through the handy in-cab monitor, it's just part of the John Deere ForestSight™ suite of solutions available from your local dealer. (See page 13 for more details.)

Configurable controls

Multiple operators can adjust control settings to their individual preferences and save favorite configurations, reducing reprogramming time and helping keep them productively on the job.

Enhanced lighting options

Six high-intensity halogen lights are standard, for when you need to extend your workday beyond daylight. For additional illumination, opt for a working-light or LED package.

JOHN DEERE FORESTSIGHT SOLUTIONS

Because time is money.

As a logger, you demand more uptime. Fast, accurate diagnosis of machine problems. Rapid, effective service response and the right part, the first time. And closer tracking of machines and operators for efficient operation. John Deere forestry technology solutions are here to help you.

JDLink™

JDLink-powered solutions include remotely monitoring machine health, troubleshooting problems, and tracking equipment activity. Alerts can be sent to your computer, mobile device, or Deere dealer to inform you of machine issues. If downtime does occur, remote diagnostics and programming enable your dealer to send a technician to the jobsite with the correct repair part in hand without an initial diagnostic visit. You can also receive periodic maintenance reminders. The core of John Deere ForestSight, JDLink is included free for five years with your base machine purchase.

John Deere Ultimate Uptime

In addition to the base John Deere ForestSight features, our dealers work with you to build an uptime package that meets your specific needs, including customized maintenance and repair agreements, onsite parts availability, extended warranties, fluid sampling, response-time guarantees, and more.

TimberNavi

TimberNavi is an intuitive, fully integrated jobsite mapping solution designed for full-tree logging operations. With in-machine visibility of current position, harvesting area, points of interest, buffer zones, and more, TimberNavi features alarm functionality for increased operator awareness of cut-block boundaries and hazards. A 10-in. high-resolution display makes the entire working area visible at a glance. By delivering accurate location information in real time, TimberNavi connects you to your machine, jobsite, and office, for increased productivity.

Reliable fuel economy

Efficient Continuously Variable Transmission (CVT) keeps engine speed constant to reduce fuel consumption, while maintaining a smooth ride and providing optimal power to the ground.

Auto-idle and auto shutdown

Auto-idle automatically reduces engine speed after an operator-determined interval of inactivity, reducing fuel consumption and noise, while extending component life. Auto shutdown turns off the engine after a preset length of time, reducing engine wear and fuel costs.

Quick and easy serviceability

Filters and critical components are conveniently located for fast service. Large panels are easily removed for wide-open access to the engine compartment, and the cab tilts to provide a quick route to other components. Grease points for boom and arch are easily reached from ground level, while extended service intervals help to further simplify maintenance.

Low total fluid consumption

John Deere FT4 engines maintain engine performance while minimizing total fluid consumption — diesel fuel plus diesel exhaust fluid (DEF). The exceptionally low DEF consumption rate reduces the need for DEF by four to six times compared to some other FT4 systems.

SERVICE MA

Hydraulic reversing fan

Auto-reversing fan reverses airflow at 30-min. intervals, or can be activated by the operator as needed, to eject debris from the cooler cores. Variable-speed fan runs only as fast as needed, or if conditions demand more frequent cleaning, simply press a button to actuate the reversing cycle.

Extended filter-change interval

Hydraulic filter service has been extended from 2,000 to 4,000 hours, decreasing planned downtime and expense. Most customers will be able to work a whole season without a change interrupting production.

Wide-open cooling package access

Cooling fan and other cooling system components swing out for quick and easy cleaning. Cooling fan reverse times are programmable to alternate settings to meet specific applications or conditions.

DE SIMPLE.

640L / 648L / 748L

Engine	640L / 648L			748L	
Manufacturer / Model	John Deere PowerTech™ PVX 6068	John Deere PowerTech™ 6068H / John Deere PowerTech™ Plus 6068H	John Deere PowerTech 6068H	John Deere PowerTech PVX 6068	John Deere PowerTech 6068H
Off-Road Emission Standards	EPA Final Tier 4/ EU Stage IV	EPA Tier 3/EU Stage IIIA	EPA Tier 2/EU Stage II	EPA Final Tier 4/ EU Stage IV	EPA Tier 2/EU Stage II
Gross Power	177 kW (237 hp)	163 kW (218 hp)	157 kW (210 hp)	196 kW (263 hp)	172 kW (231 hp)
Gross Torque	1025 Nm (756 ft.-lb.)	979 Nm (722 ft.-lb.)	943 Nm (695 ft.-lb.)	1141 Nm (841 ft.-lb.)	1020 Nm (752 ft.-lb.)
Number of Cylinders	6	6	6	6	6
Valves per Cylinder	4	4	4	4	4
Engine Displacement	6.8 L (415 cu. in.)	6.8 L (415 cu. in.)	6.8 L (415 cu. in.)	6.8 L (415 cu. in.)	6.8 L (415 cu. in.)
Engine Bore and Stroke	106 x 127 mm (4.17 X 5.00 in.)				
Fuel System	High-pressure common rail				
Aspiration	Turbocharged and charge-air cooled				
Air Cleaner	Dual stage with safety element and dust unloader valve				
Engine Cold-Start System	Glow plugs				
Cooling	**640L / 648L / 748L**				
Cooling System	Heavy-duty radiator with continuous deaeration tank and recovery reservoir				
Fan Drive	Hydraulic, variable speed, reversing				
Powertrain	**640L / 648L**			**748L**	
Transmission	Continuously Variable Transmission (CVT)			CVT	
Speed Ranges, Forward and Reverse	6			6	
Maximum Travel Speed with 30.5-32 Tires	0–24.74 km/h (0–15.37 mph) — 6 speed-range configurations available			0–24.74 km/h (0–15.37 mph) — 6 speed-range configurations available	
Axles					
Front Axle Oscillation, Stop to Stop	30 deg.			30 deg.	
Options	1400 Extreme Duty and Super Wide Extreme Duty (SWEDA™)			1425 SWEDA and 1700 Outboard-Extreme™	
Differential (front and rear)	Hydraulic-locking, operated-on-the-go, closed-center differential lock			Hydraulic-locking, operated-on-the-go, closed-center differential lock	
Steering	Fully hydraulic, joystick or wheel			Fully hydraulic, joystick or wheel	
Articulation Angle	45 deg. each direction			45 deg. each direction	
Service Brakes	Inboard-mounted, wet-disc, oil-cooled, self-adjusting and self-equalizing front and rear axles				
Parking Brake	Automatically spring-applied, hydraulically released, sealed and lubricated, wet multi-disc				
Hydraulics	**640L / 648L / 748L**				
Main Pump	Open circuit, axial piston, variable displacement				
Maximum Displacement	60 cc/rev (3.66 ci/rev)				
Electrical System					
Voltage	24 volt				
Number of Batteries (12 volt)	2				
Battery Capacity (each)	950 CCA				
Alternator Rating	150 amp				
Lights (optional)	11				
Grapples	**640L**		**648L**		**748L**
			Single Function	*Dual Function*	*Dual Function*
Standard Capacity					
Area	N/A		1.00 m² (10.8 sq. ft.)	1.24 m² (13.3 sq. ft.)	1.48 m² (15.9 sq. ft.)
Opening	N/A		3022 mm (119.0 in.)	3886 mm (153.0 in.)	3251 mm (128.0 in.)
Optional Capacity					
Area	N/A		1.24 m² (13.3 sq. ft.)	1.48 m² (15.9 sq. ft.)	1.63 m² (17.5 sq. ft.)
Opening	N/A		3226 mm (127.0 in.)	3251 mm (128.0 in.)	3886 mm (153.0 in.)
High Capacity					
Area	N/A		N/A	1.63 m² (17.5 sq. ft.)	1.77 m² (19.1 sq. ft.)
Opening	N/A		N/A	3226 mm (127.0 in.)	3785 mm (149.0 in.)
Control	N/A		Joystick	Joystick	Joystick
Refill Capacities					
Fuel Tank					
Standard	342.2 L (90.4 gal.)		342.2 L (90.4 gal.)	391.8 L (103.5 gal.)	391.8 L (103.5 gal.)
Optional	N/A		406.9 L (107.5 gal.)	457.7 L (120.9 gal.)	457.7 L (120.9 gal.)
Hydraulic Reservoir	123.6 L (32.6 gal.)		123.6 L (32.6 gal.)	123.6 L (32.6 gal.)	123.6 L (32.6 gal.)
Diesel Exhaust Fluid (DEF) Tank	19.9 L (5.2 gal.)		19.9 L (5.2 gal.)	19.9 L (5.2 gal.)	19.9 L (5.2 gal.)
Operating Weights					
Machine Weight	16 686 kg (36,787 lb.)		17 844 kg (39,340 lb.)	19 054 kg (42,009 lb.)	19 713 kg (43,460 lb.)
Dozer Blade					
			Single Function	*Dual Function*	*Dual Function*
Width	2192 mm (86.3 in.) or 2962.4 mm (116.6 in.)		2192 mm (86.3 in.) or 2962.4 mm (116.6 in.)	2192 mm (86.3 in.) or 2962.4 mm (116.6 in.)	2962.4 mm (116.6 in.)
Height	687.6 mm (27.1 in.)		687.6 mm (27.1 in.)	687.6 mm (27.1 in.)	687.6 mm (27.1 in.)

Boom Options	640L	648L		748L
Size	N/A	2.6 m (8.5 ft.)		2.6 m (8.5 ft.)
Winch	**640L / 648L / 748L**			
Winch Control	Joystick control, hydraulically driven			
Cable Capacity	4000 with 204-mm (8 in.) Drum		6000 with 279.5-mm (11 in.) Drum – 2 Speed	
15.8 mm (5/8 in.)	77.4 m (252 ft.)		119.0 m (390 ft.)	
19.1 mm (3/4 in.)	54.6 m (177 ft.)		81.4 m (267 ft.)	
22.2 mm (7/8 in.)	39.3 m (128 ft.)		60.3 m (197 ft.)	
25.4 mm (1 in.)	30.7 m (100 ft.)		46.0 m (150 ft.)	
Line Pull at Stall – 15.8-mm (5/8 in.) Cable	Bare Drum		Bare Drum	
Standard Speed	182.3 kN (41,000 lb.)		N/A	
Low Speed	N/A		221.0 kN (49,696 lb.)	
High Speed	N/A		147.3 kN (33,131 lb.)	
Winch	**640L**		**648L / 748L**	
Line Speed at 1,800 rpm – 15.8-mm (5/8 in.) Cable	4000 with 204-mm (8 in.) Drum	6000 with 279.5-mm (11 in.) Drum – 2 Speed	4000 with 204-mm (8 in.) Drum	6000 with 279.5-mm (11 in.) Drum – 2 Speed
Standard Speed	19.2 m/min. (63 fpm)	N/A	14.0 m/min. (46 fpm)	N/A
Low Speed	N/A	18.2 m/min. (60 fpm)	N/A	13.4 m/min. (44 fpm)
High Speed	N/A	27.4 m/min. (90 fpm)	N/A	20.1 m/min. (66 fpm)
Machine Dimensions	**640L**	**648L**		**748L**
		Single Function	*Dual Function*	*Dual Function*
Tire Size	30.5-32	30.5-32	30.5-32	30.5-32
A Overall Height	3365 mm (132.5 in.)	3365 mm (132.5 in.)	3365 mm (132.5 in.)	3365 mm (132.5 in.)
B Overall Width	3233 mm (127.3 in.)	3233 mm (127.3 in.)	3233 mm (127.3 in.)	3239 mm (127.5 in.)
C Maximum Blade Lift Above Ground	1517 mm (59.7 in.)	1517 mm (59.7 in.)	1517 mm (59.7 in.)	1517 mm (59.7 in.)
D Maximum Blade Dig Below Ground	359 mm (14.1 in.)	359 mm (14.1 in.)	359 mm (14.1 in.)	359 mm (14.1 in.)
E Dozer Blade Width	2192 mm (86.3 in.)	2192 mm (86.3 in.)	2192 mm (86.3 in.)	2962.4 mm (116.6 in.)
Optional Dozer Blade Width	2962.4 mm (116.6 in.)	2962.4 mm (116.6 in.)	2962.4 mm (116.6 in.)	N/A
F Wheelbase	3680 mm (144.8 in.)	3680 mm (144.8 in.)	3680 mm (144.8 in.)	3925 mm (154.5 in.)
G Ground Clearance	555 mm (21.8 in.)	557 mm (21.9 in.)	557 mm (21.9 in.)	557 mm (21.9 in.)
H Overall Length*	7591 mm (298.9 in.)	7685 mm (302.5 in.)	8029 mm (316.1 in.)	8384 mm (330.0 in.)
*Length based on 2.6-m (8.5 ft.) boom				

640L Skidder

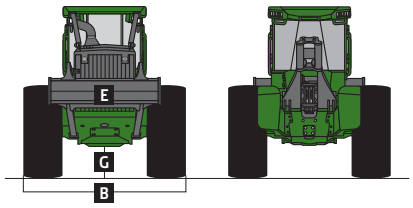

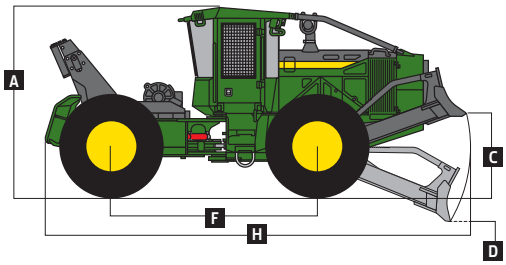

648L Single-Function Grapple

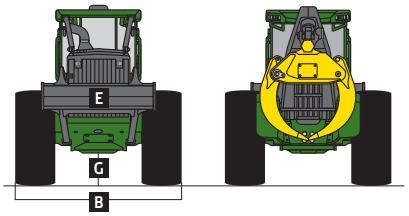

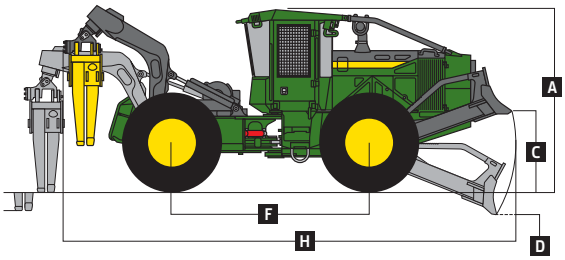

648L / 748L Dual-Function Grapple

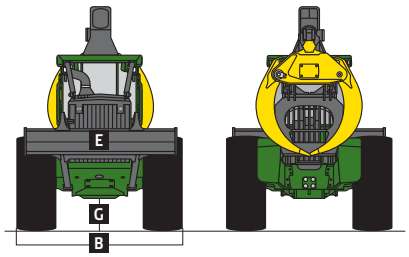

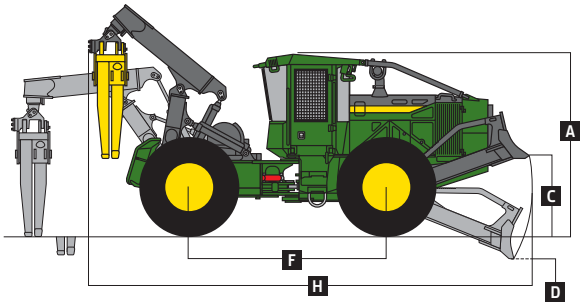

Machine not exactly as shown. Illustrations for dimensioning purposes only.
Specifications are subject to change without notice.

848L / 948L

Engine	848L			948L		
Manufacturer / Model	John Deere PowerTech™ PSS 9.0L	John Deere PowerTech™ Plus 6090H	John Deere PowerTech™ 6090H	John Deere PowerTech PSS 9.0L	John Deere PowerTech Plus 6090H	John Deere PowerTech 6090H
Off-Road Emission Standards	EPA Final Tier 4/ EU Stage IV	EPA Tier 3/ EU Stage IIIA	EPA Tier 2/ EU Stage II	EPA Final Tier 4/ EU Stage IV	EPA Tier 3/ EU Stage IIIA	EPA Tier2 / EU Stage II
Gross Power at 1,800 rpm	210 kW (281 hp)	210 kW (281 hp)	210 kW (281 hp)	224 kW (300 hp)	224 kW (300 hp)	224 kW (300 hp)
Gross Torque	1276 Nm (941 ft.-lb.)	1276 Nm (941 ft.-lb.)	1276 Nm (941 ft.-lb.)	1369 Nm (1,009 ft.-lb.)	1300 Nm (959 ft.-lb.)	1300 Nm (959 ft.-lb.)
Number of Cylinders	6	6	6	6	6	6
Valves per Cylinder	4	4	4	4	4	4
Engine Displacement	9.0 L (549 cu. in.)	9.0 L (549 cu. in.)	9.0 L (549 cu. in.)	9.0 L (549 cu. in.)	9.0 L (549 cu. in.)	9.0 L (549 cu. in.)
Engine Bore and Stroke	118.4 x 136 mm (4.66 X 5.35 in.)					
Fuel System	High-pressure common rail					
Aspiration	Turbocharged and charge-air cooled					
Air Cleaner	Dual stage with safety element and dust unloader valve					
Engine Cold-Start System	Auto ether					
Cooling	**848L / 948L**					
Cooling System	Heavy-duty radiator with continuous deaeration tank and recovery reservoir					
Fan Drive	Hydraulic, variable speed, reversing					
Powertrain						
Transmission	Continuously Variable Transmission (CVT)					
Speed Ranges, Forward and Reverse	6					
Maximum Travel Speed with 35.5-32 Tires	0–25.0 km/h (0–15.53 mph) — 6 speed-range configurations available					
Axles	1700 Outboard-Extreme™					
Front Axle Oscillation, Stop to Stop	30 deg.					
Differential (front and rear)	Hydraulic-locking, operated-on-the-go, closed-center differential lock					
Steering	Fully hydraulic, joystick or wheel					
Articulation Angle	45 deg. each direction					
Service Brakes	Inboard-mounted, wet-disc, oil-cooled, self-adjusting and self-equalizing front and rear axles					
Parking Brake	Automatically spring-applied, hydraulically released, sealed and lubricated, wet multi-disc					
Hydraulics						
Main Pump	Open circuit, axial piston, variable displacement					
Maximum Displacement	60 cc/rev (3.66 ci/rev)					
Electrical System						
Voltage	24 volt					
Number of Batteries (12 volt)	2					
Battery Capacity (each)	950 CCA					
Alternator Rating	150 amp					
Lights (optional)	11					
Grapples	**848L**			**948L**		
	Dual Function			*Dual Function*		
Standard Capacity						
Area	1.77 m^2 (19.1 sq. ft.)			2.07 m^2 (22.3 sq. ft.)		
Opening	3785 mm (149.0 in.)			3886 mm (153.0 in.)		
Optional Capacity						
Area	1.63 m^2 (17.5 sq. ft.)			1.77 m^2 (19.1 sq. ft.) or 1.63 m^2 (17.5 sq. ft.)		
Opening	3886 mm (153.0 in.)			3785 mm (149.0 in.) or 3886 mm (153.0 in.)		
Control	Joystick			Joystick		
Refill Capacities	**848L / 948L**					
Fuel Tank						
Standard	391.8 L (103.5 gal.)					
Optional	457.7 L (120.9 gal.)					
Hydraulic Reservoir	123.6 L (32.6 gal.)					
Diesel Exhaust Fluid (DEF) Tank	19.9 L (5.2 gal.)					

Specifications are subject to change without notice.

Operating Weights	848L	948L
Machine Weight	22 384 kg (49,349 lb.)	22 416 kg (49,420 lb.)
Dozer Blade	**848L / 948L**	
Width	2962.4 mm (116.6 in.)	
Height	691.0 mm (27.2 in.)	
Boom Options		
Size	2.6 m (8.5 ft.) / 3.0 m (9.8 ft.)	
Winch		
Winch Control	Joystick control, hydraulically driven	
Cable Capacity	4000 with 204-mm (8 in.) Drum	6000 with 279.5 mm (11 in.) Drum – 2 Speed
15.8 mm (5/8 in.)	77.4 m (252 ft.)	119.0 m (390 ft.)
19.1 mm (3/4 in.)	54.6 m (177 ft.)	81.4 m (267 ft.)
22.2 mm (7/8 in.)	39.3 m (128 ft.)	60.3 m (197 ft.)
25.4 mm (1 in.)	30.7 m (100 ft.)	46.0 m (150 ft.)
Line Pull at Stall – 15.8-mm (5/8 in.) Cable	*Bare Drum*	*Bare Drum*
Standard Speed	182.3 kN (41,000 lb.)	N/A
Low Speed	N/A	221.0 kN (49,696 lb.)
High Speed	N/A	147.3 kN (33,131 lb.)
Line Speed at 1,800 rpm – 15.8-mm (5/8 in.) Cable		
Standard Speed	14.0 m/min. (46 fpm)	N/A
Low Speed	N/A	13.4 m/min. (44 fpm)
High Speed	N/A	20.1 m/min. (66 fpm)
Machine Dimensions		
	Dual Function	
Tire Size	35.5-32	
A Overall Height	3454 mm (136.0 in.)	
B Overall Width	3575 mm (140.7 in.)	
C Maximum Blade Lift Above Ground	1578 mm (62.1 in.)	
D Maximum Blade Dig Below Ground	298 mm (11.7 in.)	
E Dozer Blade Width	2962.4 mm (116.6 in.)	
F Wheelbase	3975 mm (156.5 in.)	
G Ground Clearance	604 mm (23.7 in.)	
H Overall Length*	8469 mm (333.4 in.)	

*Length based on 2.6-m (8.5 ft.) boom

848L / 948L Dual-Function Grapple

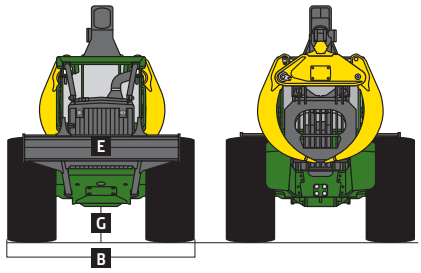

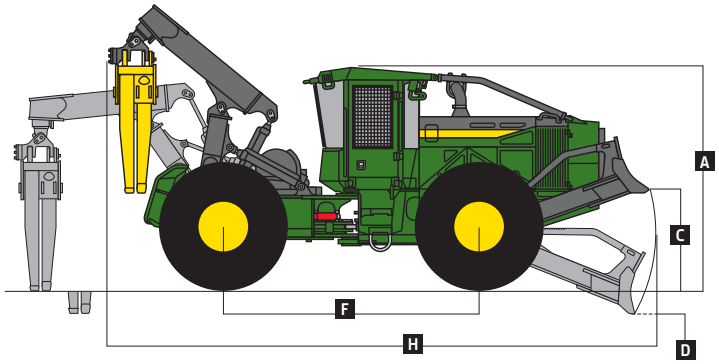

Machine not exactly as shown. Illustrations for dimensioning purposes only.

JOHN DEERE
JohnDeere.com/forestry
TO FIND SUCCESS IN THE FOREST,
YOU CAN WAIT FOR THE PERFECT SET OF CONDITIONS.
Or give yourself every advantage to create your own.
Productive machines. Innovative technology. Useful insights.
Dependable support. A full set of solutions that only one
equipment manufacturer can provide.
The obstacles to success are many. John Deere helps you
OUTRUN™ THEM ALL.
DKDLSKDR Litho in U.S.A. (17-06)

Winch	848L / 948L	
Winch Control	Joystick control, hydraulically driven	
Cable Capacity	4000 with 204-mm (8 in.) Drum	6000 with 279.5 mm (11 in.) Drum – 2 Speed
15.8 mm (5/8 in.)	77.4 m (252 ft.)	119.0 m (390 ft.)
19.1 mm (3/4 in.)	54.6 m (177 ft.)	81.4 m (267 ft.)
22.2 mm (7/8 in.)	39.3 m (128 ft.)	60.3 m (197 ft.)
25.4 mm (1 in.)	30.7 m (100 ft.)	46.0 m (150 ft.)
Line Pull at Stall – 15.8-mm (5/8 in.) Cable	*Bare Drum*	*Bare Drum*
Standard Speed	182.3 kN (41,000 lb.)	N/A
Low Speed	N/A	221.0 kN (49,696 lb.)
High Speed	N/A	147.3 kN (33,131 lb.)
Line Speed – 15.8-mm (5/8 in.) Cable		
Standard Speed	14.0 m/min. (46 fpm)	N/A
Low Speed	N/A	13.4 m/min. (44 fpm)
High Speed	N/A	20.1 m/min. (66 fpm)

Machine Dimensions		
		Dual Function
Tire Size		35.5-32
A	Overall Height	3454 mm (136.0 in.)
B	Overall Width	3575 mm (140.7 in.)
C	Maximum Blade Lift Above Ground	1578 mm (62.1 in.)
D	Maximum Blade Dig Below Ground	298 mm (11.7 in.)
E	Dozer Blade Width	2962.4 mm (116.6 in.)
F	Wheelbase	3975 mm (156.5 in.)
G	Ground Clearance	542 mm (21.3 in.)
H	Overall Length	8469 mm (333.4 in.)

848L / 948L Dual-Function Grapple

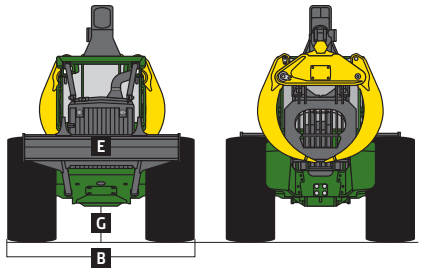

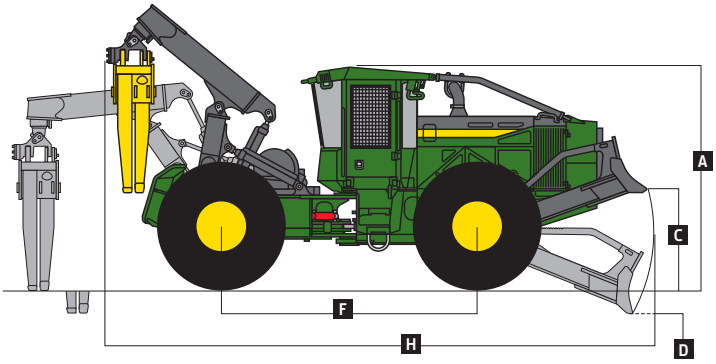

Machine not exactly as shown. Illustrations for dimensioning purposes only.

JOHN DEERE

07-24-16

JohnDeere.com/forestry