TIMBERJACK FORWARDER

1410D 1710D

Timberjack

A John Deere Company

1410D
1710D

Struggling with heavy loads and rough conditions?

Then let the new Timberjack 1710D and 1410D forwarders rise to the challenge. The largest members of our forwarder family have been upgraded with Timberjack's latest technology. With a load capacity ranging from 14 to 17 tonnes, these friendly giants are ready for any task.

Performance around the clock

With specially designed axles and large wheels, the 1410D and the 1710D are ideal for your high-volume, long-haul, round-the-clock operations. The 1410D is the right partner for large-scale, fully-mechanized operations, such as heavy regeneration harvesting with big trees, when larger forwarders cannot be used. With a selection of two deck lengths and boom reach options, you can easily match it to your logging requirements.

The Timberjack 1710D is specifically designed for large loads up to 17 tonnes. This machine is unbeatable in long forwarding distances and in difficult terrain, like deep snow, steep slopes and rocky surfaces.

Large loads · great results

The new D series is all about best-ever performance. Both of these big boys are designed to carry heavy loads with fast cycles to raise your production figures. These forwarders have earned a worldwide reputation as hard-working and reliable machines. Now they get even more work done.

As a result, you gain through improved productivity and better overall economy.

Friendly giants

Despite their size, the 1410D and the 1710D are environmentally sound solutions. The unique balanced and streamlined bogie, only available on Timberjack machines, combined with a low center of gravity, advanced control system and optimum tire sizes, provides excellent level of soft tractive force and reduces ground impact. The low-emission Deere engine meets the latest emission regulations in both Europe and North America.

TIMBERJACK FORWARDER

1410D
1710D

Big boys with a light touch

Timberjack designs its machines with the environment in mind. This is true for the valuable natural resource – the forest, and also your valuable human resource – the machine operators.

A home away from home

Like all Timberjack machines, the 1710D and 1410D series forwarders are designed for their users – the operators. The spacious cabins offer excellent visibility in all directions and provide all the ergonomic innovations you have come to expect from Timberjack machines. Your Timberjack working environment has numerous features that increase both operator comfort and working efficiency.

Enjoy your work in a new light

Timberjack offers a new standard for forwarder visibility day or night. The new, optional Xenon lights produce same the amount of light as conventional light bulbs, but last five times longer and consume only one-third of the energy. The enhanced illumination is comparable to natural light, making it gentle on the human eye.

The gentle choice

The patented balanced bogie system is a unique solution for optimized weight distribution that makes our machines the gentle choice for the forest floor. This system balances the bogie beam, enabling optimum weight distribution between the front and rear wheels. This significantly reduces the ground impact and ensures a gentle touch even when the forwarder is fully loaded. The exceptionally wide ground clearance between the bogie beams helps avoid hang-ups on rocks and stumps, which improves driving and speeds up cycle times.

TIMBERJACK FORWARDER

1410D
1710D

Take a load off your shoulders

Not just big in size, the 1710D and 1410D forwarders are also big when it comes to productivity. Empowered with a new John Deere engine and new powerful booms, they are poised to tackle even the toughest transportation missions.

Higher output at lower rpm

A new electrically-controlled, turbo-charged and intercooled John Deere diesel engine supplies the 1710D and 1410D series machines with superior output and remarkably more torque compared to previous models. The high torque allows the engine to operate at lower rpm, resulting in excellent fuel economy, increased component life and reduced noise levels. In addition, service intervals for essentials like engine oil and filter changes have been extended from 250 hours to 500 hours, which decreases maintenance time and costs.

Experience a powerful boom

The 1710D and 1410D forwarders are both equipped with a new type of boom. More powerful yet lighter in weight, the new boom has a simplified design with a single telescopic boom extension. The longer reach options of the 1410D have double extension. Stronger throughout, the boom has higher lifting capacities at every reach in the working range.

Smooth operation

The optional boom damping feature ensures faster, smoother and more accurate boom operation and enhances operator comfort. The damping of lift and slew movements reduces shocks and strain on the boom structure raising the durability of the boom mechanics to a much higher level.

Enhanced serviceability

Enhanced serviceability ensures convenient access to all routine service points from ground level.

For preventive maintenance, the cab is hydraulically lifted and shifted to one side, and the belly pan is lowered and raised by a winch. Locking and lifting points for transportation have been added as well as a special middle-joint locking device.

TIMBERJACK FORWARDER

1410D
1710D

Large and fast

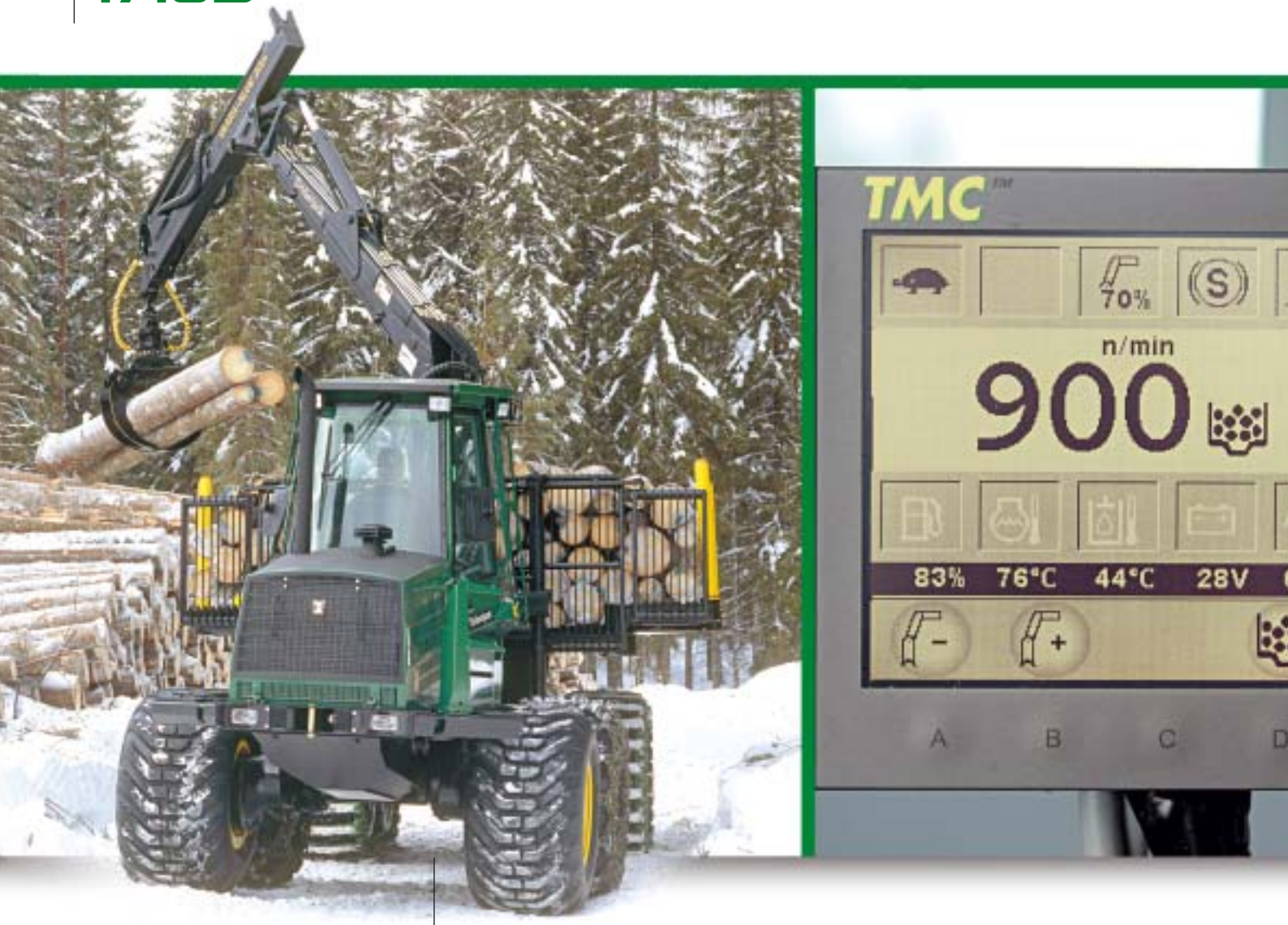

The high productivity rates of the 1710D and 1410D forwarders, based on large loads and fast cycle times, is achieved with the help of Timberjack's proven TMC™ (Total Machine Control) system and its patented balanced bogie. The new active load space, ALS, enables full-load transport in all conditions.

ALS or VLS for full loads at top speeds

The patented innovation, ALS (Active Load Space), enables full loads to be transported at higher speeds in all conditions. Based on a hydraulically dampened bunk construction with an expandable and tilting load space, the new concept allows swift and smooth driving over rocks, stumps and other obstacles even when fully loaded. The dampening reduces stress on the frame, axles and wheels, while the tilting load space helps improve stability during transportation and speeds up loading and unloading operations. Smooth transportation with less swaying also means better driving ergonomy and reduced ground impact. As a result, you can improve your overall productivity through increased capacity and flexibility. Timberjack is the only one to offer this much anticipated feature as a new option for its 1410D and 1710D forwarders.

VLS (Variable Load Space) is a load space option with a hydraulic sideways expansion. You can select from two load space widths – adding 80 cm more width to the regular load space. Conversely, you can use a narrower load space when moving in thinnings or during road transportation. The hydraulically movable headboard ensures an optimized center of gravity regardless of the load length.

Productivity at your fingertips

Equipped with the latest version of the Timberjack TMC™ (Total Machine Control System), the 1710D and 1410D forwarders allow your operators to concentrate on quick loading, unloading and transportation. TMC™ optimizes machine performance through effective boom operation and transmission controls and by enabling simultaneous loading and moving. It also provides the operator with valuable information about various machine functions.

A friendly PC world

The new centralized, digital control system Timbermatic™700 is available to further enhance your forwarder functions. This option facilitates communication between harvesters and forwarders providing, for example, information about logs on the worksite. The PC-based system integrates e-mail, maps and GPS programs to the TMC™ offering advanced machine follow-up functions to help you achieve your productivity goals.

TIMBERJACK

Technical Data

FORWARDER

1410D 1710D

TAKE CONTROL • MAKE DECISIONS

	1410D	1710D
Weight	Depending on equipment 6-wheel ..... 14 800-15 800 kg 8-wheel ..... 16 500-17 500 kg	Depending on equipment 6-wheel ..... 17 000 kg – 18 000 kg 8-wheel ..... 18 500 kg – 19 500 kg
Load space	Length ..... 5425 mm optional ..... 4225 mm Width ..... 2760 mm Cross sectional area ..... 4.6 m² Fixed headboard with hydr. extension; 4 bunks, 8 stakes	Length ..... 5560 mm optional ..... 4760 mm Width ..... 2953 mm Cross sectional area ..... 5.3 m² Hydr. movable headboard; 4 bunks, 8 stakes
Engine	John Deere 6068 HTJ77 water-cooled turbocharged and inter-cooled 6-cylinder diesel engine Output ..... 136 kW/1900rpm Max. torque ..... 779 Nm/1400 rpm Fuel tank volume ..... 165 l Electrical control for engine rpm Engine fault diagnostics	John Deere 6081 HTJ02, charge air cooled, turbo-charged 6-cylinder diesel engine Output ..... 160 kW / 2100 rpm Max. torque ..... 1090 Nm / 1400 rpm Fuel tank volume ..... 180 l
Transmission	Power train controlled by Timberjack TMC™ (Total Machine Control). Hydrostaticmechanical power transmission. Range gear with low and high range. Power distributed between the front and rear axles. Off-road driving, smooth no-surge start without dropping engine speed. Release of rear-wheel drive. Travel speed max. 22 km/h. Max. tractive force 175 kN.	Timberjack TMC™ (Total Machine Control) - system. Hydrostatic-mechanical power transmission. Range gear with low and high range. Power distributed between the front and rear axles. Off-road driving, smooth no-surge start without dropping engine speed. Release of rear-wheel drive. Travel speed max. 23 km/h. Max. tractive force 200 kN.
Axles	Heavy-duty bogie axles with portal type bogie beams including patented balancing units. Similar axles at front and rear on 8-wheel. Hub planetaries in 6-wheel front axle. Power transmission through gears in bogie beams. Hydraulically operated mechanical differential lock front and rear. Disconnection of rear axle drive with high range.	Bogie axles with portal type bogie beams including patented balancing units. Similar axles at front and rear on 8-wheel. Hub planetaries in 6-wheel front axle. Power transmission through gears in bogie beams. Hydraulically operated mechanical differentiallock in front and rear. Disconnection of rear axle drive with high range.
Steering	Articulated frame steering with two hydraulic stering cylinders. Proportional steering with an electrical mini lever. Steering angle +/-42°.	Articulated frame steering with two hydraulic steering cylinders. Steering angle ±42°. Proportional steering with electric joystick.
Brakes	Service and working brakes are hydraulically actuated, oil immersed multiple disc brakes. Identical in both axles. Spring actuated parking- and emergency brakes in front and rear bogies. According to ISO 11169.	Service and working brakes are hydraulically actuated, oil immersed multiple disc brakes. Identical in both axles. Spring actuated parking- and emergency brakes in front and rear bogies. According to ISO 11169.

• BOOST PROFITS • THINK GREEN

	1410D	1710D
Tires	Front 700/50x26.5/20 700/55x34/14 (optional) 600/55x26.5/20 600/65x34/14 Rear 700/50x26.5/20 700/50x26.5/20 (optional) 600/55x26.5/20 600/55x26.5/20	Front.....750/55x26.5/20 700/70x34/16 (optional) .....650/65x26.5/20 Rear .....750/55x26.5/20 750/55x26.5/20 (optional) 650/65x26.5/20 650/65x26.5/20
Hydraulic system	Controlled by Timberjack TMC™-system. Load-sensing hydraulic system. Pressure.....24.0 Mpa Pump volume .....140 cc Hydraulic oil reservoir.....140 l	Timberjack TMC™-system. Load-sensing hydraulic system with power control. Pressure.....24.0 MPa Pump volume .....140 cc Hydraulic oil reservoir.....190 l
Electrical system	Voltage .....24 V Batteries.....2 x 140 Ah Alternator .....140 A Working lights .....10 x 140 W Twin Power	Voltage .....24 V Batteries.....2 x 140 Ah Alternator .....140 A Working lights .....10 x 140 Twin Power
Cab	Spacious, light and comfortable cab giving the operator excellent vision in all directions. Efficient heating and air conditioning. The cab meets ISO standards for ROPS, FOPS, OPS. Thanks to the unique mounting of the cab, the noise level and vibrations are low. The cab can be raised and shifted to the side for easy service access. Radio/cassette player. Connection for cellular phone. Tinted polycarbonate windows. Air cushioned seat with electrically locked seat swivel.	Spacious, light and comfortable cab giving the operator excellent vision in all directions. Efficient heating and air conditioning. The cab meets ISO standards for ROPS, FOPS, OPS. Thanks to the unique mounting of the cab, the noise level and vibrations are low. The cab can be raised and shifted to the side for easy service access. Radio/cassette receiver. CD-changer. Connection for cellular phone. Tinted polycarbonate windows. Air cushioned seat with electrical locked seat swivel.
Standard equipment	Hydraulic headboard transfer with hydraulic extension Timberjack TMC™ (Total Machine Control) Stability brake Tow hook Electrical refill pump for hydraulic oil Engine oil drain hose Vacuum pump Electrical fuel refill pump Mineral hydraulic oil Fire extinguisher ABE III Sprinkler system Hydraulic steps Exhaust pipe guard Neck support Tool kit	Timberjack TMC™ (Total Machine Control) Fire extinguisher ABE III / 5 kg Sprinkler system Hydraulic steps Stability brake Drain hoses for engine oil, hydraulic oil and fuel Mineral hydraulic oil Vacuum pump for hydraulic system Electrical hydraulic oil refill pump Electrical fuel refill pump Exhaust pipe support Neck support Tow hook - 25 tn Tool kit Spare Parts Catalogue/Operator's manual Decals in English

Spare Parts Catalogue/Operator's manual
Decals in English

Optional equipment

1410D

Preparedness for clambunk
Sweep wire cabin protection
Protective screen for radiator grille
Biodegradable hydraulic oil
Separate 550 l fuel tank
Mechanical fuel refill pump
Decking blade
Wipers on rear side windows
Chains, tracks
Sun blinds in all windows
Spare tire and wheel rims
Reverse camera
Boom scale
Xenon lights
Preheater

1710D

Decking blade
Steel wire branch protection
Engine hood front protection
Preheater 10 kW: engine, cabin and tank
Biodegradable hydraulic oil
Chains, tracks
Sun blinds in all windows
Spare tire and wheel rim
Reverse camera
Boom scale
Environmental kit

Loader

Boom CF7

General
In all types the slew torque is 32 kNm with a slew angle of 380 degrees and a gross lifting moment of 125 kNm.

CF772 (optional)

Reach ..... 7.2 m
Length of extension ..... 1390 mm
Max. load at max. reach ..... 1240 kg*

CF785

Reach ..... 8.5 m
Length of extension ..... 2630 mm
Max. load at max. reach ..... 985 kg*

CF710 (optional)

Reach ..... 10 m
Length of extension ..... 4200 mm
Max. load at max. reach ..... 810 kg*

*) Without grapple, link and rotator

Boom CF885

General for boom
Slew torque is 41 kNm with an angle of 380 degrees.
Gross lifting moment ..... 151 kNm
Reach ..... 8.5 m
Length of extension ..... 2170 mm
Max. load at max. reach ..... 1185 kg*

* Without grapple, link and rotator

Note! Standard and optional equipment may vary. For details contact your local dealer.

Technical Data 1410D 1710D

FORWARDER

1410D Dimensions

Length	10495 mm
optional	9295 mm
Width	3090 mm (700-tires)
optional	2910 mm (600-tires)
Transportation height	3800 mm
Ground clearance (6-wheel)	575 mm
Ground clearance (8-wheel)	605 mm
Wheelbase	5250 mm
Load rating	14 000 kg

Note! Measurements are nominal and may vary due to tire manufacturing tolerances.

1710D Dimensions

Length	10 900 mm
optional	10 100 mm
Width	3050 mm (750-tires)
optional	3000 mm (650-tires)
Transportation height	3900 mm
Ground clearance (6-wheel)	680 mm
Ground clearance (8-wheel)	730 mm
Wheelbase	5900 mm
(optional)	5500 mm
Load rating	17 000 kg

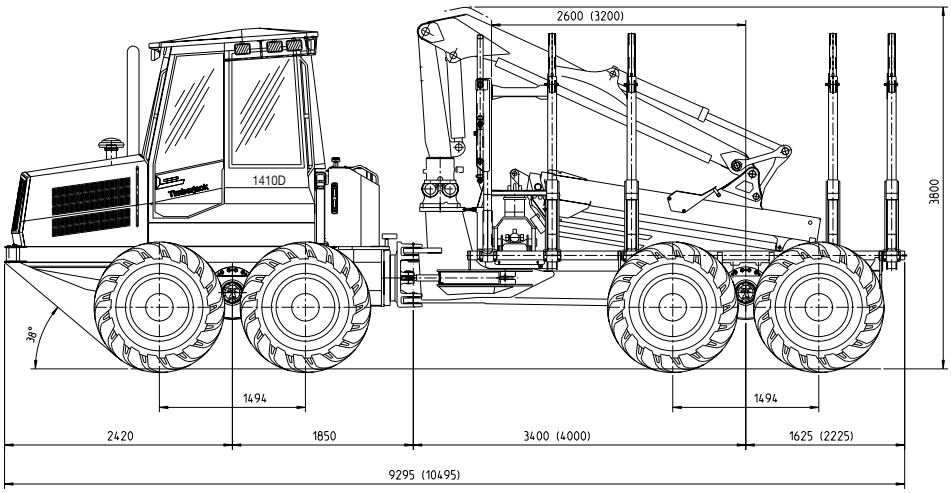

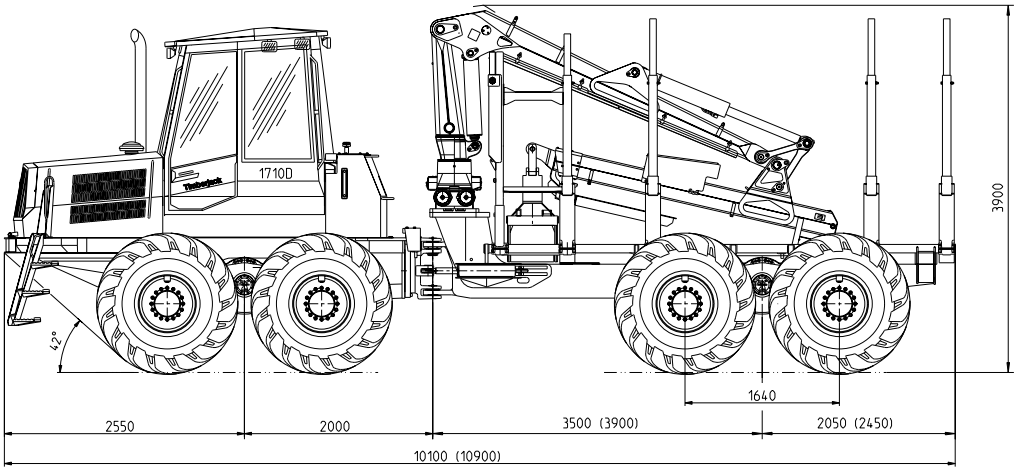

TAKE CONTROL

Timberjack is no ordinary forwarder. It is the right and "bright" partner that makes you - the operator - a better professional in forest operations. When you invest in Timberjack, you are not only getting a robust high-production machine but also a complete package of forest management capabilities.

MAKE DECISIONS

The state-of-the-art control system automatically performs all instructed travel and work functions with incredible speed and precision.

BOOST PROFITS

Ensuring high output in various forwarding applications, Timberjack delivers optimum results whatever the task. It gives you the freedom to move from one job to the next without missing a beat. Geared up for outstanding performance, Timberjack is your razor-sharp business partner.

THINK GREEN

You can always depend on Timberjack for an environmetally sound solution. It's your strongest ally when it comes to sustaining both a healthy residual forest and a reputation for responsible forest stewardship.

www.timberjack.com

The manufacturer reserves the right to make changes or add improvements without incurring any obligation to make such changes on machines manufactured previously.

This brochure may include features or options not available in all markets.

® Timberjack, Timbermatic, TMC, TimberOffice, FlashCut and the donkey symbol are registered trademarks of Timberjack Inc. Supercut™ is a trademark of Hultdins System Ab.

Imageneering/Printed in Finland by Offset Ulonen. EN/05/03

Timberjack
A John Deere Company