FORWARDERS

1410D 1710D

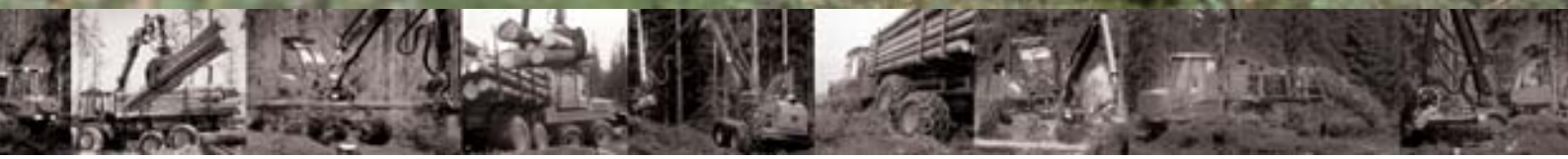

JOHN DEERE

LARGE JOHN DEERE FORWARDERS.
PERFORMANCE AROUND THE CLOCK.

HEAVY LOADS. DEMANDING CONDITIONS. HIGH PRODUCTIVITY.

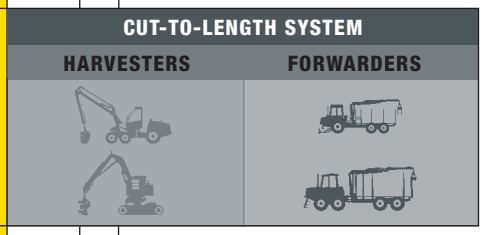

The John Deere 1410D and 1710D forwarders take on the toughest challenges in harvesting. The performance of the machines is unparalleled in all conditions. These giants are designed for loads weighing between 14 and 17 tonnes, which makes them fit for even the toughest jobs, providing good turnaround and revolutionary productivity.

The 1410D makes a versatile, efficient partner for John Deere harvesters in regeneration harvesting applications in robust forests. Thanks to its multiple load space options the machine can be easily equipped to meet the requirements of the harvesting application.

The 1710D is designed especially for forwarding larger loads. It is unbeatable when it comes to long forwarding distances and difficult terrain, such as deep snow, steep slopes and stony soil.

The machines in the John Deere 1410D and 1710D series combine excellent productivity and environmental friendliness despite their large size. Both models are available with either six or eight wheels.

Applications of the 1410D and the 1710D Forwarders

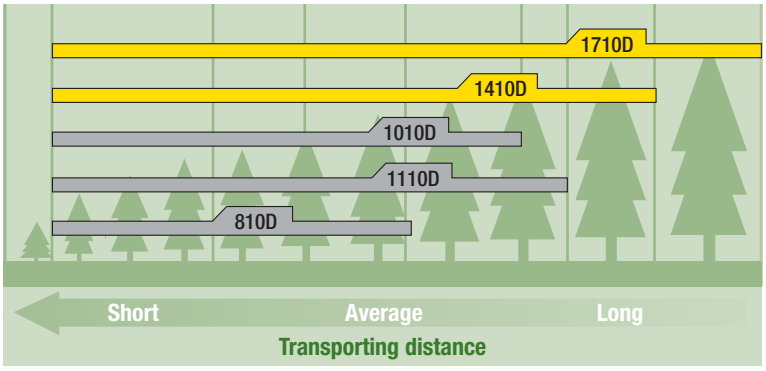

LARGE SIZE. HIGH UPTIME. EASY MAINTENA

The cab conforms to safety regulations and provides excellent visibility in all directions. The cab boasts efficient air-conditioning and sound insulation. A CD player / radio is provided. The large windows are made from tinted polycarbonate safety glass and blinds that provide shade from sunlight are available as optional equipment. The sturdy air-cushioned seat has various adjustments. The cab is equipped with halogen/xenon lights and a connection for a mobile telephone.

The TMC control system governs all functions of the machine. The versatile and easy-to-use Windows-based Timbermatic 700 system is offered as an alternative.

The engine hood is light to lift, allowing for easy and safe maintenance access. Components that require daily or scheduled servicing are easily accessible. Accessories include a diesel heater.

The John Deere PowerTech JD6068 HTJ diesel engine has good fuel economy and high torque at low rpm. The cooling system for the engine and the hydraulics remains efficient even in demanding conditions. Components that require daily or scheduled servicing are easily accessible.

The strong belly pan can be lowered and raised using a winch. Access to all service points located underneath is easy, fast and safe.

Access to service points located underneath the cab is easy, as the cab moves aside hydraulically. Service lights are provided on the bottom surface of the cab. Optional equipment includes electrical refill pumps for fuel and hydraulic oil and a vacuum pump.

The powerful CF7 boom is easy to control and the motions are soft making loading and unloading more efficient. Optional hydraulic dampening of the slew and lifting motions is available.

The efficient hydraulics system makes operating the forwarder effortless. The large diameter hydraulic hoses and pipes reduce pressure loss. The high-grade filter system lengthens the life of the components.

The low centre of gravity of the load space keeps the machine steady in all conditions. Two different frame lengths, two fixed load space widths and two variable load space widths (VLS and ALS) are available. The machine is equipped with a fixed or hydraulically operated strong headboard.

The machine is equipped with a patented balanced bogie. The axles are the same as in the front of the eight-wheeled version. Several tyre options are available, complete with compatible chains and tracks. Options include an HD (Heavy Duty) bogie axle, which enables the use of ultra-wide tyres and tracks.

The eight-wheeled version is equipped with a patented balanced bogie; the six-wheeled machine has a rigid front axle. The machine has excellent ground clearance. High tractive force ensures necessary drive in the roughest of terrains. Several tyre options are available, complete with compatible chains and tracks. Options include an HD (Heavy Duty) bogie axle, which enables the use of ultra-wide tyres and tracks.

The frame structure and middle joint are of strong composition. The result is a well-balanced unit with a powerful frame brake. The positioning of the middle joint, the slewing angle of +/- 42 degrees and the generous ground clearance give the forwarder a small turning radius, agility and excellent tracking.

TORQUE. POWER. PRODUCTIVITY.
LOW OPERATING COSTS.

As a result of extensive experience and expertise, John Deere forest machines operate efficiently and without harming the environment. The power and reliability of the 1410D and the 1710D are known throughout the world.

Despite their sturdy size, the John Deere 1410D and 1710D forwarders are environmentally friendly solutions. The unique balanced and streamlined bogie structure of John Deere forest machines, the low centre of gravity, the advanced transmission control system and the large tyres reduce ground pressure and the effects of the terrain. The John Deere engines have low emissions, low rpm and conform to the latest emission regulations. The stability of the machines and the efficient frame brake make loading and unloading smooth and safe. The powerful booms and the advanced control system add the finishing touches to the composition. Operators appreciate the easy-to-use controls, excellent visibility in all directions and the efficient lights.

The patented balanced bogie increases the environmental friendliness of the machines significantly. The even distribution of the weight between all wheels reduces the ground impact and ensures a gentle ride even when the forwarder is fully loaded. The Heavy Duty (HD) axles, which are available as optional equipment, allow for the machines to be equipped with ultra-wide tyres or tracks, which make the machine move even more efficiently over soft surfaces.

The John Deere PowerTech diesel engines comply with the emission regulations and provide good fuel economy. The high torque at low rpm makes operating the forwarders pleasant and efficient, lowers fuel consumption and lengthens the life of the components. The strong hydrostatic transmission allows the machines to move effortlessly in the terrain.

Part of the bogie structure is located inside the rim of the wheel to allow for as high and wide a ground clearance as possible. The machines can thus go over rocks and stumps with ease. This helps to select routes and improves the productivity of the machine.

EFFICIENT OPERATION.
GOOD VISIBILITY.
COMFORT IN NEW LIGHT.

Similarly to all John Deere forest machines, the 1410D and 1710D forwarders have also been designed with a special emphasis on the needs of the operator. The numerous details of the roomy cab, which aim at facilitating the work of the operator, improve efficiency and comfort. The spacious cab provides good visibility in all directions both when it is light and dark. The optional xenon lights, which imitate daylight, provide many times the power of traditional halogen lights.

The sturdy seat and ergonomically designed controls ensure a pleasant working environment for the operator. The comfort of the working environment is further improved by the optional sun blinds, the efficient air conditioning and heating system and the cabin air filter, which keeps the interior air of the cab fresh and clean.

The software features a versatile fault diagnostics function and the system issues reminders of scheduled maintenance services. The reports produced by the Timbermatic 700 can also be printed out using an A4 size colour printer.

The cab has plenty of storage space and shelving, a CD player for the operator's entertainment and even an integrated lunch-box, where the operator can store his packed lunch and which the operator can take with him when he leaves the cab.

Operators appreciate the easy-to-use controls and the large, clear display of the control system. The TMC (Total Machine Control) system facilitates the work of the operator and speeds up loading, unloading and forwarding. The TMC optimises the performance of the machine through efficiently controlling the boom functions and power transmission. The speed of the loader can be adjusted at the touch of a button during loading. The TMC also provides valuable information on the different functions of the machine, such as the average or momentary fuel consumption.

The Timbermatic 700 system is available as an alternative to the TMC system. The Timbermatic 700 creates a tele-communications link between the harvester and the forwarder, generating advantages through providing information on the location of logs produced by the harvester. The PC-based Timbermatic 700 and the large colour display provide the operator with the tools of the Windows environment from email to maps and GPS software.

The Timbermatic 700 and the TMC improve overall productivity and allow for easy use of the latest monitoring tools, such as the boom scale and the reverse camera. The sensors and software of the optional boom scale measure the weight of the logs. In addition to more efficient use of the load space, the scale helps keeping the loads a suitable size, thus ensuring safe and fast forwarding. The calibration of the self-learning scale increases the reliability of the system.

REACH. HANDLING.
QUALITY. ACCURACY.

The booms of John Deere forwarders are the most functional and efficient in the market.The booms are easy to control thanks to the low-effort control levers and the TMC or the Timbermatic 700 system. Saving operator-specific settings in the system memory speeds up changes between operators and the quick-setting push buttons make the implementation of speeds required by different harvesting applications easy.

The strongly built long-reaching booms are positioned at an appropriate distance almost parallel to the operator's field of vision. This allows for smooth and natural controlling of movements in all directions. Optional equipment includes hydraulic dampening of the slew and lifting motions.

The high slewing and lifting torques of the CF7 in the 1410D and the CF8 in the 1710D ensure lifting of heavy loads and efficient operation even with the longest reach lengths. Three different reach lengths are available for the CF7 and one for the CF8.

The 1410D and 1710D forwarders are available with two alternative frame lengths. Both models have two alternative fixed cross sectional areas, and two variable load space options (VLS and ALS). These combinations make it possible to optimise the forwarding capacity according to the need.

The VLS (Variable Load Space) is an optional equipment, which allows for the size of the load space to be adjusted hydraulically and without steps. Depending on the conditions as much as 64 centimetres additional width is available for forwarding and sorting short pulpwood and energy wood.

At its narrowest the load space is ideal for operating in narrow spaces and for transportation on public roads.

The patented ALS (Active Load Space) solution allows for the fast transportation of full loads even in difficult terrains. The active dampening of the load space eases the stress on the frame, the axles and the wheels. The tilting function of the load space keeps the machine in balance during forwarding and speeds up loading and unloading.
The ALS solution is only available in John Deere forwarders.

Boom Reach and Grapple Options

	Grapple 0.25 m^2	Grapple 0.35 m^2
1410D / CF7	7.2 / 8.5 / 10.0 m	7.2 / 8.5 / 10.0 m
1710D / CF8	8.5 m	8.5 m

EASY MAINTENANCE. HIGH UPTIME. **STURDY**

The powerful CF8 boom makes loading and unloading more efficient. The boom is easy to control and it has soft motions. The 8.5 m telescopic boom has one extension. Optional hydraulic dampening of the slew and lifting motions is available.

The efficient hydraulics system makes operating the forwarder effortless. The large diameter hydraulic hoses and pipes reduce pressure loss. The high-grade filter system lengthens the life of the components.

The low centre of gravity of the load space keeps the machine steady in all conditions. Two different frame lengths as well as two fixed load space widths and VLS (Variable Load Space) and ALS (Active Load Space) are available. The machine is equipped with a fixed or hydraulically operated strong headboard.

The machine is equipped with a patented balanced bogie. The axles are the same as in the front of the eight-wheeled version. Several tyre options are available, complete with compatible chains and tracks. Options include an HD (Heavy Duty) bogie axle, which enables the use of ultra-wide tyres and tracks, for example.

The frame structure and middle joint are of strong composition. The result is a well-balanced unit with a powerful frame brake. The positioning of the middle joint, the slewing angle of +/- 42 degrees and the generous ground clearance give the forwarder a small turning radius, agility and good tracking.

QUALITY. POWER.

The cab conforms to safety regulations and provides excellent visibility in all directions. The cab boasts efficient air-conditioning and sound insulation. A CD player / radio is provided. The large windows are made from tinted polycarbonate safety glass and blinds that provide shade from sunlight are available as optional equipment. The sturdy air-cushioned seat has various adjustments. The cab is equipped with halogen/xenon lights and a connection for a mobile telephone.

The TMC control system governs all functions of the machine. The versatile and easy-to-use Windows-based Timbermatic 700 system is offered as an alternative.

The engine hood is light to lift, allowing for easy and safe maintenance access. Components that require daily or scheduled servicing are easily accessible. Accessories include a diesel heater.

The John Deere PowerTech JD6081 HTJ diesel engine has good fuel economy and high torque at low rpm. The cooling system for the engine and the hydraulics remains efficient in all conditions.

The eight-wheeled version is equipped with a patented balanced bogie. The six-wheeled machine has a rigid front axle. The machine has excellent ground clearance. The highest tractive force of its size class ensures necessary drive even in the most extreme conditions. Several tyre options are available, complete with compatible chains and tracks. Options include an HD (Heavy Duty) bogie axle, which enables the use of ultra-wide tyres and tracks.

The strong belly pan can be lowered and raised using a winch. Access to all service points is easy, fast and safe.

Access to service points located underneath the cab is easy, as the cab moves aside hydraulically. Service lights are provided on the bottom surface of the cab. Optional equipment includes electrical refill pumps for fuel and hydraulic oil and a vacuum pump, for example.

TECHNICAL DATA 1410D 1710D

	1410D 6W	1410D 8W	1710D 6W	1710D 8W
LOAD RATING [kg]	14,000		17,000	
DIESEL ENGINE	John Deere 6068 HTJ		John Deere 6081 HTJ	
Power Output [kW] @ [rpm]	136 @ 1,900		160 @ 2,100	
Torque [Nm] @ [rpm]	779 @ 1,400		1,090 @ 1,400	
Fuel Tank [l]	165		180	
TRANSMISSION	Hydrostatic-mechanical 2-speed Gearbox			
Tractive Force [kN]	175		200	
Speed, mode 1 [km/h]	0 - 8		0 - 8	
mode 2 [km/h]	0 - 22		0 - 23	
STEERING	Proportional Frame Steering			
Steering Angle [+/-°]	42		42	
BRAKES	Service and working brakes are hydraulically actuated, oil-immersed multi-disc brakes. Spring-actuated parking and emergency brakes. ISO 11169.			
AXLES/BOGIES	Rigid axles at the front; Balanced gear bogie axles at the rear; Hydro-mechanical differential lock at the front and the rear	Balanced gear bogie axles; Hydro-mechanical differential lock at the front and the rear; optional HD axles also available	Rigid axles at the front; Balanced gear bogie axles at the rear; Hydro-mechanical differential lock at the front and the rear	Balanced gear bogie axles; Hydro-mechanical differential lock at the front and the rear; optional HD axles also available
ELECTRICAL SYSTEM				
Voltage.	24 V		24 V	
Batteries	2 x 145 Ah		2 x 149 Ah	
Alternator	140 A (28V)		140 A (28V)	
Working Lights	10 x 140W Twin Power, xenon lights also available			
HYDRAULICS	Load-sensing, with power control		Load-sensing, with power control	
Pump Volume [cm^3]	140		140	
Working Pressure [Mpa]	21.5		21.5	
Hydraulic Tank [l]	140		190	
BOOM	CH7		CF8	
Maximum Reach Lengths [m]	7.2 / 8.5 / 10.0		8.5	
Gross Lifting Torque [kNm]	125		151	
Slewing Torque [kNm]	32		41	
Slewing Angle [°]	380		380	
CAB	Safe and in conformity with ISO standards.			
CONTROL SYSTEM	TMC or PC/Windows-based Timbermatic 700			
OPTIONAL EQUIPMENT	Information on the equipment is available from your local dealer.			

The manufacturer reserves the right to make changes or add improvements at any time without incurring any obligation to make such changes on machines manufactured previously.

MEASUREMENTS [mm]*

	1410D 6W	1410D 8W	1710D 6W	1710D 8W
A Length				
- Standard Wheelbase	9,295		10,100	
- Long Wheelbase	10,495		10,900	
B Bogie - Middle Joint	1,850		2,000	
C Middle Joint - Bogie	3,400 (4,000)		3,500 (3,900)	
D Headboard - Bogie	2,567 (3,167)		2,750 (3,150)	
E Bogie - Rear				
- Standard Wheelbase	1,625		2,050	
- Long Wheelbase	2,225		2,450	
F Width, Front				
- 600 Tyres	2,750	2,766 / 2,906 with HD axles	—	—
- 650 Tyres	—	—	—	2,990 / 3,150 with HD axles
- 700 Tyres	2,920	2,956 / 3,096 with HD axles	2,950	—
- 750 Tyres	—	—	—	3,050 / 3,210 with HD axles
- 800 Tyres	—	3,106 only with HD axles	—	—
F Width, Rear				
- 600 Tyres	2,766 / 2,906 with HD axles		—	
- 650 Tyres	—		2,990 / 3,150 with HD axles	
- 700 Tyres	2,956 / 3,096 with HD axles		—	
- 750 Tyres	—		3,050 / 3,210 with HD axles	
- 800 Tyres	3,106 only with HD axles		—	
G Minimum Transportation Height	3,800		3,900	
H Ground Clearance	575	605	680	730

LOAD SPACE OPTIONS *

	1410D Standard	1410D Wide	1410D VLS	1410D ALS	1710D Standard	1710D Wide	1710D VLS	1710D ALS
I Overall Length [mm]								
- Standard Wheelbase	4,192	4,192	—	—	4,800	4,800	4,655	4,600
- Long Wheelbase	5,392	—	—	—	5,600	—	—	—
J External Width [mm]	2,760	2,940	2,753-3,393	2,760-4,200	2,953	3,400	2,963-3,603	2,930-4,500
Cross Sectional Area [m²]	4.6	5.0	4.4-5.4	3.5-8.1	5.3	6.2	5.4-6.6	3.7-8.7

* Note! The measurements are nominal and may vary depending on the manufacturing tolerances. (Measurements for the long wheelbase are given in brackets.)

WEIGHT [kg]

	1410D 6W	1410D 8W	1710D 6W	1710D 8W
Depending on Accessories, from	15,200	16,900	18,100	20,430

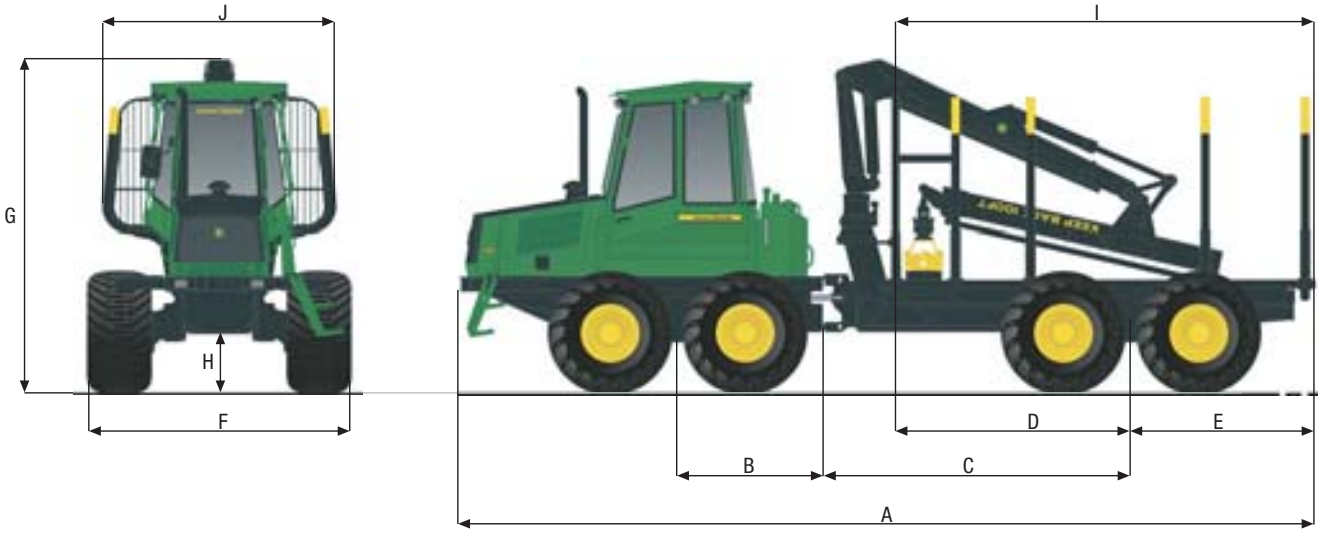

FORWARDERS

1410D 1710D

NOTHING RUNS LIKE A DEERE.

MAYBE THOSE WORDS ARE THE REASON WHY ALMOST EVERY OTHER PROFESSIONAL LOGGER IS A JOHN DEERE CUSTOMER.

They're just five simple words. Yet they have profound impact on your company. Because at their heart they mean equipment that is built forest tough, with greater productivity, more uptime and lower daily operating costs. They mean a dealer network over 380 locations strong, with immediate access to parts and experts that understand your industry. They mean a dedicated lender in John Deere Credit, committed to helping loggers succeed with competitive financing to enhance cash flow. And they mean a global forestry equipment leader that invests more in R & D than any other manufacturer.
But most of all, these words represent the confidence that comes with over 168 years of heavy equipment experience.

Your world is logging. So is ours. John Deere Forestry. Leading the way, worldwide.

FULL TREE SYSTEM | CUT-TO-LENGTH SYSTEM

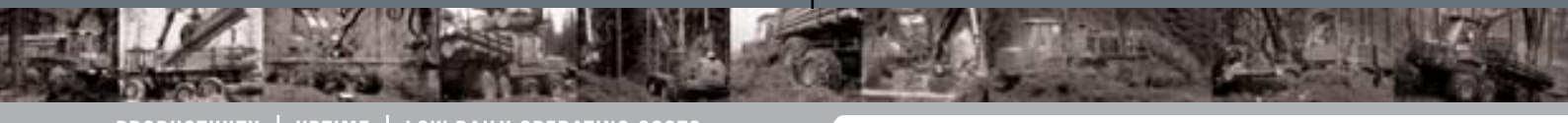

PRODUCTIVITY | UPTIME | LOW DAILY OPERATING COSTS

www.JohnDeere.com

John Deere Forestry Ltd.
Unit 6, Grove Industrial Estate
Castleside Road, Consett
County Durham. Great Britain.
Tel. (0) 1207 583 610
Fax (0) 1207 583 607

John Deere Forestry Ltd.
Ballyknocken
Glenealy
Co. Wicklow. Ireland.
Tel. (0) 404 44969
Fax (0) 404 44972

JOHN DEERE
Nothing Runs Like A Deere