TIMBERJACK FORWARDER | EN

810D 1110D

Timberjack

A John Deere Company

TIMBERJACK FORWARDER

810D

1110D

Your companion in the forest

Timberjack 1110D and 810D forwarders have been upgraded to enhance your logging performance with reliable and quick loading, unloading and transportation operations. Together with the 770D, 1070D and 1270D harvesters, these machines help you boost the productivity of the entire logging process, as well as make your contracts more profitable.

The 1110D is the perfect partner for your 1270D in heavier regeneration harvesting applications. Together with the 1070D harvester it makes an ideal team for thinning and light regeneration applications.

Agile and strong

Not surprisingly, the 1110 series machines are known to be the most popular forwarders in their size class. Now upgraded with the Timberjack's latest technology, the new 1110D series forwarders are ready to tackle various logging tasks from later thinnings to regeneration harvesting with more versatility and durability than ever before. Agile and strong, this machine finds its way easily, even through toughest forest terrain.

Small is efficient

The smallest member in our forwarder family, the 810D is the ideal choice for logging in dense thinning areas. This eight-wheel machine is specifically designed for sensitive applications where size plays a decisive role. Despite its size, this machine is equipped with all the technological benefits that make Timberjack a name you can trust when working in the forest.

Gentle on the environment

The 1110D and the 810D series forwarders combine productivity and environmentally sound operations. The unique balanced and streamlined bogie, combined with a low center of gravity, advanced control system and optimum tire sizes, provides excellent level soft tractive force and reduces ground impact. The low-emission Deere engine meets the latest emission regulations in Europe and North America.

TIMBERJACK FORWARDER

810D

1110D

A perfect match

Logging is not just the work done alone in the middle of the forest. Teamwork is required at many levels of the wood procurement process to get the most benefit. Your harvester and forwarder operators are a team - together with their Timberjack machines.

Enjoy your work

Like all Timberjack machines, the 1110D and 810D series forwarders are designed for their users, - the operators. The modern cabins offer excellent visibility with numerous details that increase operator comfort and working efficiency.

Efficiency in a new light

Timberjack offers a new standard for forwarder visibility for day and night. The new, optional Xenon lights produce the same amount of light as conventional light bulbs, but last five times longer and consume only a third of the energy. The enhanced illumination is comparable to natural light, making it gentle on the human eye.

Teaming up for fast cycle times

Equipped with the latest version of the Timberjack TMC™ (Total Machine Control System), the 1110D and 810D forwarders allow your operators to concentrate on quick loading, unloading and transportation. TMC™ optimizes machine performance through effective boom operation and transmission controls and by enabling loading during the move. It also provides the operator with valuable information about various machine functions.

A friendly PC world

The new centralized, digital control system Timbermatic™700 is available to further enhance your TMC™ based forwarder functions. This option facilitates communication between harvesters and forwarders providing, for example, information about logs on the worksite. As a PC-based system, the Timbermatic™700 allows you to work in a familiar Windows® environment with software tools, e-mail, maps and GPS programs.

Productivity at your fingertips

The Timbermatic™700 PC and the standard TMC™ modules help you achieve your productivity goals with advanced options for integrated machine follow-up functions, such as scale. The scale option package includes sensors and a software system that can measure load weight in the grapple during loading and unloading. This option supports efficient utilization of the load space and helps optimize the load for safe and quick transportation.

TIMBERJACK FORWARDER

810D

1110D

The new dimensions of efficiency

Thanks to our long experience in professional logging, we provide machines that work in the forest gently and efficiently. Like all our machines, the 1110D and 810D forwarders are built to be part of an environmentally sound logging system.

A gentle eight-wheel touch

The patented balanced bogie system balances the bogie beam, enabling optimum weight distribution between the front and rear wheels. This significantly reduces the ground impact and ensures a gentle touch even when the forwarder is fully loaded. The exceptionally wide ground clearance helps avoid hang-ups on rocks and stumps, which improves driving and speeds up cycle times.

Strong booms for smooth operation

The CF1 boom with 7.2 m single, as well as 8.7 m and 9.8 m double extentions provides the 810D with an expanded maximum reach. The enhanced 76 kNm gross lifting moment combined with the higher slew torque make loading and unloading faster and productivity in steep slopes is increased.

Quick controls

The boom base placed close to the operator and the optimized boom geometry ensure precise and smooth movements especially for thinnings.

The 810D also features an active boom-slew floating function that keeps the boom above the load while driving.

The powerful CF5 boom (1110D) features a strong construction and provides 7.2 m single and 8.5 m and 10 m double extension reaches.

A higher gross lifting torque allows greater lifting capacity at maximum extension. An increased working pressure of 24 MPa together with a lower hydraulic flow and optimized piping reduces hydraulic system losses and provides better fuel efficiency.

The TMC™ based quick control option enables the operator to quickly adjust the boom speed to specific task requirements, and change the speed during operation.

The boom damping option ensures smooth boom performance and improves the boom's durability especially when working in demanding conditions.

TIMBERJACK FORWARDER

810D

1110D

Made for better results

The 1110D and 810D series forwarders are set to break all the standards for small forest machines with their big performance power. Timberjack´s new and innovative technology features will raise your production figures to new heights - and give you more value-adding benefits than any other forwarder in this size class.

High-torque engine

A new electrically-controlled, turbocharged and intercooled John Deere diesel engine supplies the 1110D and 810D series machines with superior output and remarkably more torque compared to previous models. The high torque allows the engine to operate at lower rpm, which translates into excellent fuel economy, increased component life and reduced noise levels. In addition, service intervals for essentials like engine oil and filter changes have been extended from 250 hours to 500 hours, which decreases maintenance time and costs.

Variable load space

Variable Load Space (VLS) is a new sideways widening loadspace option available for the 1110D series forwarders to optimize transportation capacity in different logging operations. You can select between two different load space widths – adding 60 cm more width to the regular load space. Correspondingly, you can select a narrower load space when moving in thinnings or during road transportation. VLS further allows easier sorting and optimized load sizes also with short pulpwood and energy wood. As a result, you increase your overall productivity.

Made for you...

Enhanced serviceability was a top priority when designing the 1110D and 810D machines. All service points are easily accessible and the unique shift tilt cabin provides excellent and safe access to objects underneath the cabin. Locking and lifting points for transportation have been added to both the front and rear frames with a special middle-joint locking device. A winch for lowering and raising the belly pan completes the practical design of the 1110D.

TIMBERJACK

Technical Data

810D 1110D

FORWARDER

TAKE CONTROL • MAKE DECISIONS

	810D Forwarder	1110D Forwarder
Weight	Depending on equipment ..... 10,400 kg – 11,500 kg	Depending on equipment 6-wheel ..... 12,700 kg – 14,000 kg 8-wheel ..... 14,600 kg – 15,900 kg
Load space	Length ..... 3840/4460 mm Width ..... 2450/2585 mm Cross sectional area..... 3.4/3.9 m^2	Length ..... 4580/4980 mm Width ..... 2570/2760 mm Cross sectional area..... 4.0/4.3 m^2
Engine	John Deere JD4045 HTJ75 water-cooled turbo-charged, 4-cylinder diesel engine Output..... 86 kW / 2000 rpm Max. torque..... 498 Nm / 1400 rpm Fuel tank capacity..... 110 l	John Deere JD6068 HTJ75 turbo-charged, 6-cylinder diesel engine, CAC (Charge Air Cooled) Output..... 120 kW / 2000 rpm Max. torque..... 719 Nm / 1400 rpm Fuel tank capacity..... 150 l
Transmission	Timberjack TMC® (Total Machine Control) system. Hydrostatic-mechanical power transmission. Range gear with low and high range. Power distributed between the front and rear axles. Off-road driving, smooth no-surge start without dropping engine speed. Release of rear-wheel drive. Travel speed max. 23 km/h. Max. tractive force 110 kN.	Timberjack TMC® (Total Machine Control) system. Hydrostatic-mechanical power transmission. Range gear with low and high range. Power distributed between the front and rear axles. Off-road driving, smooth no-surge start without dropping engine speed. Release of rear-wheel drive. Travel speed max. 23 km/h. Max. tractive force 150 kN.
Axles	Bogie axles with portal type bogie beams including patented balancing units. Similar axles in front and rear. Power transmission through gears in bogie beams. Hydraulically operated mechanical differential lock in front and rear. Disconnection of rear/axle drive with high range.	Bogie axles with portal type bogie beams including patented balancing units. Similar axles in front and rear on 8-wheels. Hub planetaries in 6-wheel front axle. Power transmission through gears in bogie beams. Hydraulically operated mechanical differential lock in front and rear. Disconnection of rear/axle drive with high range.
Steering	Articulated frame steering with two hydraulic steering cylinders. Steering angle ±44º. Proportional steering with electric joystick.	Articulated frame steering with two hydraulic steering cylinders. Steering angle ±44°. Proportional steering with electric joystick.

• BOOST PROFITS • THINK GREEN

Brakes	Service and working brakes are hydraulically actuated, oil immersed multiple disc brakes. Identical in both axles. Spring actuated parking and emergency brakes in front and rear bogies. According to ISO 11169.	Service and working brakes are hydraulically actuated, oil immersed multiple disc brakes. Identical in both axles. Spring actuated parking and emergency brakes in front and rear bogies. According to ISO 11169.
Tires	**810D** Front ..... 600/700x22.5 Rear 600/700x22.5	**1110D** Front ..... 8-w.....600/700x26.5 6-w.....600/700x34 Rear 600/700x26.5
Hydraulic system	Timberjack TMC® system. Load-sensing hydraulic system with power control. Pressure..... 24 MPa Pump volume ..... 74 cc/r Hydraulic oil reservoir .. 78 l	Timberjack TMC® system. Load-sensing hydraulic system with power control. Pressure..... 24 MPa Pump volume ..... 130 cc/r Hydraulic oil reservoir .. 140 l
Electrical system	Voltage..... 24 V Batteries ..... 2 x 115 Ah Alternator..... 100 A / 24 V Working lights..... 8 x 140 Twin Power	Voltage..... 24 V Batteries ..... 2 x 140 Ah Alternator..... 100 A / 24 V Working lights..... 8 x 140 Twin Power
Cab	Spacious, light and comfortable cab giving the operator excellent vision in all directions. Efficient heating and air conditioning. The cab meets ISO standards for ROPS, FOPS and OPS. Thanks to the unique mounting of the cab, the noise level and vibrations are low. The cab can be raised and shifted to the side for easy service access. Radio/cassette receiver. Connection for cellular phone. Tinted polycarbonate windows. Air-cushioned seat with air locked seat swivel.	Spacious, light and comfortable cab giving the operator excellent vision in all directions. Efficient heating and air conditioning. The cab meets ISO standards for ROPS, FOPS and OPS. Thanks to the unique mounting of the cab, the noise level and vibrations are low. The cab can be raised and shifted to the side for easy service access. Radio/cassette receiver. Connection for cellular phone. Tinted polycarbonate windows. Air-cushioned seat with air locked seat swivel.

TIMBERJACK

Technical Data

810D 1110D

FORWARDER

Loader

CF1

General for loader

In all types the slew torque is 19 kNm with a 380º angle and the gross lifting moment is 76 kNm.

CF172

Reach ..... 7.2 m

Length of extension ..... 1390 mm

Max. load at max. outreach ... 850 kg*)

CF187

Reach ..... 8.7 m

Length of extension..... 2780 mm

Max. load at max. outreach ... 585 kg*)

CF198

Reach ..... 9.8 m

Length of extension..... 3940 mm

Max. load at max. outreach ... 465 kg*)

* without grapple, link and rotator

CF5

General for loader

In all types the slew torque is 24,4 kNm with a 380º angle and the gross lifting moment is 102 kNm.

CF572

Reach ..... 7.2 m

Length of extension..... 1390 mm

Max. load at max. outreach ... 1080 kg*)

CF585

Reach ..... 8.5 m

Length of extension ..... 2630 mm

Max. load at max. outreach ... 800 kg*)

CF510

Reach ..... 10 m

Length of extension..... 4200 mm

Max. load at max. outreach ... 580 kg*)

* without grapple, link and rotator

Equipment

Timberjack offers a versatile selection of equipment. You can pick the ones that best suit your needs. Contact your local dealer for more details.

Timberjack offers a versatile selection of equipment. You can pick the ones that best suit your needs. Contact your local dealer for more details.

The manufacturer reserves the right to make changes or add improvements at any time without incurring any obligation to make such changes on machines manufactured previously.

The manufacturer reserves the right to make changes or add improvements at any time without incurring any obligation to make such changes on machines manufactured previously.

Technical Data 810D 1110D

FORWARDER

Dimensions 810D Forwarder

Length	8030/8695 mm
Width	2530 mm (600-tires)
	2670 mm (700-tires)
Transport height	3700 mm
Ground clearance	595 mm
Wheelbase	4243/4543 mm
Load rating	9000 kg

Dimensions 1110D Forwarder

Length	9425/9825 mm
Width	2700 mm (600-tires)
	2880 mm (700-tires)
Transport height	3770 mm
Ground clearance	605 mm
Wheelbase	5000/5400 mm
Load rating	12000 kg

Note! Measurements are nominal and may vary due to tire manufacturing tolerances.

810D

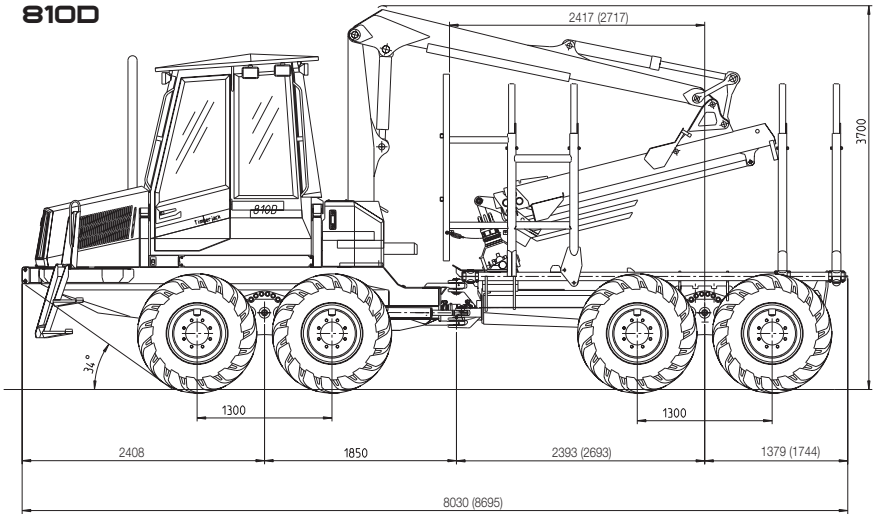

1110D

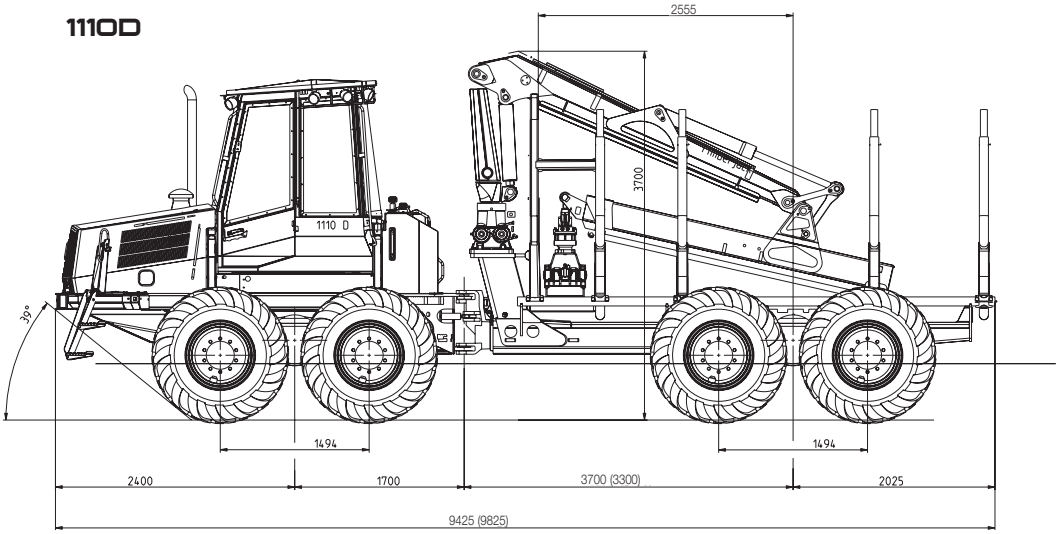

TAKE CONTROL

Timberjack is no ordinary forwarder. It is the right and "bright" partner that makes you - the operator - a better professional in forest operations. When you invest in Timberjack, you are not only getting a robust high-production machine but also a complete package of forest management capabilities.

MAKE DECISIONS

The state-of-the-art control system automatically performs all instructed travel and work functions with incredible speed and precision.

BOOST PROFITS

Ensuring high output in various forwarding applications, Timberjack delivers optimum results whatever the task. It gives you the freedom to move from one job to the next without missing a beat. Geared up for outstanding performance, Timberjack is your razor-sharp business partner.

THINK GREEN

You can always depend on Timberjack for an environmetally sound solution. It's your strongest ally when it comes to sustaining both a healthy residual forest and a reputation for responsible forest stewardship.

This brochure may include features or options not available in all markets.

® Timberjack, Timbermatic, TMC, TimberOffice, FlashCut and the donkey symbol are registered trademarks of Timberjack Inc. Supercut™ is a trademark of Hultdins System Ab.

Imageneering/Printed in Finland by Offset Ulonen. 04/04

www.timberjack.com

Timberjack

A John Deere Company