FORWARDERS

810D 1110D

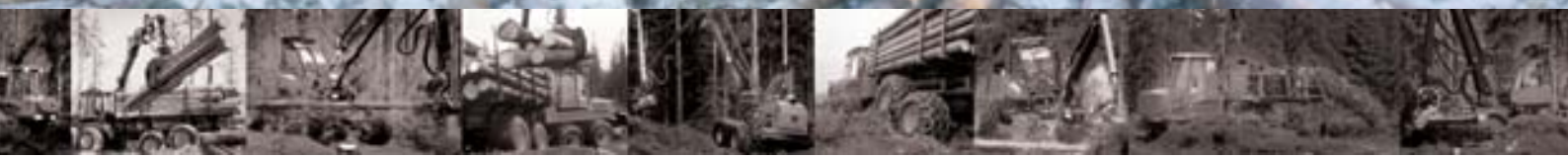

JOHN DEERE

JOHN DEERE FORWARDERS.
RELIABLE PARTNERS.

AGILITY AND STRENGTH. HIGH EFFICIENCY. GENTLE ON THE ENVIRONMENT.

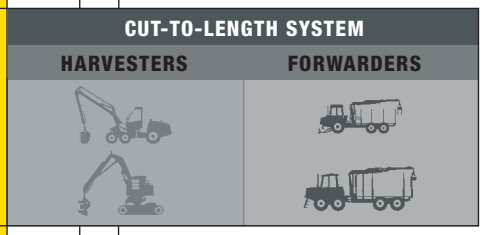

The smallest member of the John Deere forwarder family, the 810D is ideally suited for dense thinning sites. The eight-wheel machine is designed for sensitive applications that require a high level of accuracy and where size matters.

The John Deere 1110D is the most popular forwarder in its size class, offering durability and versatility from thinning to regeneration harvesting. The agile and strong machine moves effortlessly even in the most demanding terrain. The John Deere 810D and 1110D combine excellent productivity and environmental friendliness.

Applications of the 810D and the 1110D forwarders

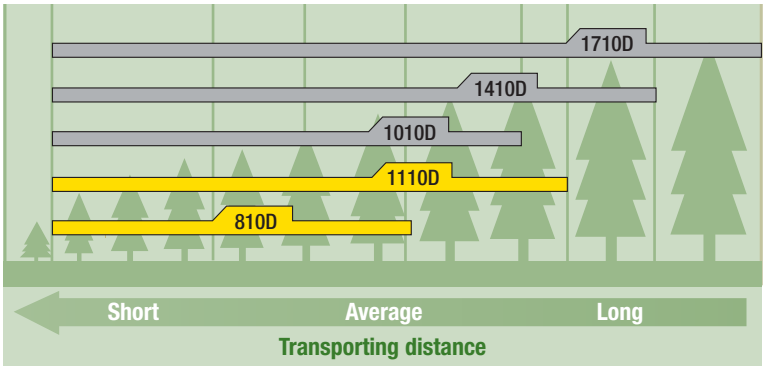

SMALL SIZE. HIGH UPTIME. EASY

The efficient hydraulic system makes operating the forwarder effortless. The large diameter hydraulic hoses and pipes reduce pressure loss. The high-grade filter system lengthens the life of the components.

The low centre of gravity of the load space keeps the machine steady in all conditions. Two different frame lengths and three different load space widths are available. The machine is equipped with a fixed or hydraulically operated strong headboard.

The frame structure and middle joint are of strong composition and the frame brake is highly efficient. The positioning of the middle joint, the steering angle of +/- 44 degrees and the generous ground clearance provide the forwarder with a small turning radius, agility and good tracking.

The machine is equipped with a patented balanced bogie. Several tyre options are available, complete with compatible chains and tracks.

Maintenance is easy as the cab moves aside hydraulically. Service lights are provided in the space underneath the cab. Optional equipment include electrical refill pumps for fuel and hydraulic oil and a vacuum pump.

The machine is equipped with a patented balanced bogie and has excellent ground clearance. High tractive force ensures drive even in the roughest of terrains. Several tyre and chain options are available.

MAINTENANCE.

The cab conforms to safety regulations and provides excellent 360 degree visibility. The cab boasts efficient air-conditioning and sound insulation. A CD player / radio is provided. The large windows are made from tinted polycarbonate safety glass and blinds that provide shade from sunlight are available as an optional equipment. The sturdy air-cushioned seat has various adjustments. The cab is equipped with Halogen/Xenon lights and a connection for a mobile telephone.

The powerful CF1 boom is easy to control and it has soft motion. Its position is ideal for thinning. The ASF function (Active Slewing Function) controls the position of the boom and holds the grapple steady while driving. Optional equipment include hydraulic dampening of the slew and lifting motions.

The TMC control system governs all functions of the machine. The versatile and easy-to-use Windows-based Timbermatic 700 system is offered as an alternative.

The John Deere PowerTech JD4045 HTJ diesel engine provides good fuel economy and high torque at low rpm. The cooling system for the engine and the hydraulics is highly efficient.

The engine hood is light to lift. Maintenance is easy and safe. Service points are easily accessible. Accessories include, for example, a diesel heater.

The strong belly pan can be lowered and raised using a winch. Access to all service points is easy, fast and safe.

TORQUE. POWER. PRODUCTIVITY.
LOW OPERATING COSTS.

As a result of extensive experience and expertise, John Deere forest machines operate efficiently and without harming the environment. The 810D and 1110D forwarders are designed for improving the productivity of the entire timber harvesting chain.

The John Deere PowerTech diesel engines comply with the emission regulations and provide good fuel economy. The high torque at low rpm makes operating the forwarders pleasant and efficient. The strong hydrostatic drive transmission allows the machines to move effortlessly in the terrain.
The bogie axles of the John Deere forest machines are of a unique design. The balanced bogie assists the machine on steep and slippery slopes and soft ground.

The John Deere forwarder makes a productive partner for a John Deere harvester. Thanks to the powerful John Deere engine, the hydrostatic transmission and the unique balanced bogie unit, the forwarder moves effortlessly in any kind of terrain.

The stability of the machines and the efficient frame brake make loading and unloading smooth and safe. The efficient boom and the advanced control system add the finishing touches to the composition. The easy-to use controls, excellent 360 degree visibility and powerful lights facilitate the operator's work.

The patented balanced bogie distributes the weight evenly between all wheels. This reduces the ground impact and ensures a gentle ride even when the forwarder is fully loaded.

Part of the bogie structure is located inside the rim of the wheel to allow for as high and wide a ground clearance as possible. The machines can thus go over rocks and stumps without difficulties. This helps to choose routes and improves the productivity of the machine.

ENJOYABLE OPERATION.
GOOD VISIBILITY.
EFFICIENCY IN NEW LIGHT.

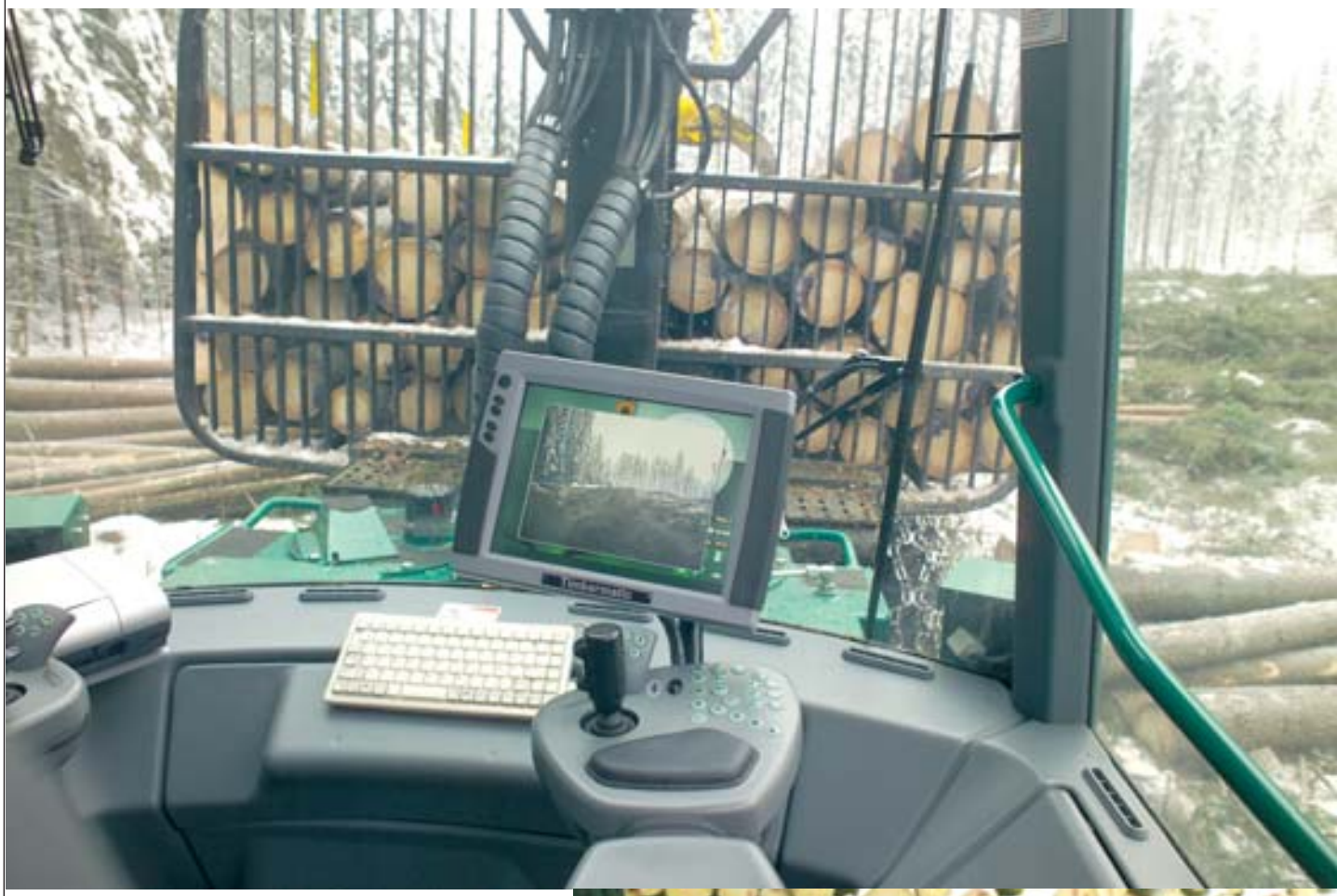

The operator has played a central role in the design of the cab in John Deere forwarders. The cab has excellent visibility, and the sturdy seat and ergonomically designed controls ensure that the operator does not get tired. The comfort of the working environment is further improved by the optional sun blinds, the efficient air conditioning and heating system and the cabin filter, which keeps the interior air of the cab fresh and clean.

The TMC (Total Machine Control) system facilitates the work of the operator and speeds up loading. The TMC optimises the performance of the machine through efficiently controlling the loader functions and power transmission. The speed of the loader can be adjusted at the touch of a button during loading. The TMC provides information on the different functions of the machine, such as the average or momentary fuel consumption.

The Timbermatic 700 and the TMC improve overall productivity and allow for easy use of the latest monitoring tools, such as the boom scale and the reverse camera. The sensors and software of the optional boom scale measure the weight of the load and the logs. This allows for efficient use of the load space: the loads remain a suitable size and forwarding is safe and fast. The self-learning calibration function of the scales increases the reliability of the system.

The software features a versatile fault diagnostics function and the system issues reminders of scheduled maintenance services. The reports produced by the Timbermatic 700 can also be printed out using an A4 size colour printer.

The Timbermatic 700 system is available as an alternative to the TMC system. The Timbermatic 700 creates a tele-communications link between the harvester and the forwarder, generating advantages through providing information on the location of logs produced by the harvester. The large colour display provides the operator with the tools of the Windows environment from email to maps and GPS software.

The generous storage space and well-positioned shelves as well as the take-away lunch box make the working day of the operator easier.

REACH. HANDLING.
QUALITY. ACCURACY.

The loaders of the John Deere forwarders are easy to steer thanks to the low-effort control levers and the TMC or the Timbermatic 700 system. Saving operator-specific settings in the system memory speeds up changes between operators and the quick-setting push buttons make the implementation of different operating speeds easy.

The strongly built long-reaching booms are positioned at an appropriate distance almost parallel to the operator's field of vision. This allows for smooth and natural controlling of movements. Optional equipment include hydraulic dampening of the slew and lifting motions and an ASF - function for the boom of the 810D, which adjusts the position of the boom and holds the grapple still above the load while the machine is turning.

The 810D is available with two alternative load space lengths and the 1110D with as many as four. Both have three alternative cross sectional areas. These combinations make it possible to optimise the forwarding capacity according to the need.

The VLS (Variable Load Space) is an optional equipment available for the 1110D, which allows for the size of the load space to be adjusted hydraulically and without steps. Depending on the conditions as much as 60 centimetres additional width is available for forwarding and sorting short pulpwood and energy wood. At its narrowest the load space is ideal for transportation or operating in a thinning site.

Boom Reach and Grapple Options

	Grapple 0.25 m^2	Grapple 0.35 m^2
810D / CF1	7.2 / 8.7 / 9.8 m	7.2 / 8.7 m
1110D / CF5	7.2 / 8.5 / 10 m	7.2 / 8.5 m

The high slewing and lifting torques of the CF1 in the 810D and the CF5 in the 1110D ensure efficient operation even with the longest reach lengths. Three different reach lengths are available for the boom, and the grapples come in two different sizes.

EASY MAINTENANCE. HIGH UPTIME. STURDY

The powerful CF5 boom is easy to control and it has soft motions. Three different reach lengths are available depending on the grapple in use. Optional hydraulic dampening of the slew and lifting motions is available.

The efficient hydraulics system makes operating the forwarder effortless. The large diameter hydraulic hoses and pipes reduce pressure loss. The high-grade filter system lengthens the life of the components.

The cab conforms to safety regulations and provides excellent visibility in all directions. The cab boasts efficient air-conditioning and sound insulation. A CD player / radio is provided. The large windows are made from tinted polycarbonate safety glass and blinds that provide shade from sunlight are available as an optional equipment. The sturdy air-cushioned seat has various adjustments. The cab is equipped with Halogen/Xenon lights and a connection for a mobile telephone.

The engine hood is light to lift. Maintenance is easy and safe. Components that require daily or scheduled servicing are easily accessible. Optional equipment include a diesel heater.

The John Deere PowerTech JD6068 HTJ diesel engine provides good fuel economy and high torque at low rpm. The cooling system for the engine and the hydraulics remains efficient in all conditions.

The strong belly pan can be lowered and raised using a winch. Access to all service points is easy, fast and safe.

QUALITY. POWER.

The low centre of gravity of the load space keeps the machine steady in all conditions. Four different frame lengths and two fixed load space widths as well as VLS (Variable Load Space) are available. The machine is equipped with a fixed or hydraulically operated strong headboard.

The machine is equipped with a patented balanced bogie. The axles are the same as in the front. Several tyre, chain and track options are available.

The frame structure and middle joint are of strong composition. The result is a well-balanced unit with a powerful frame brake. The positioning of the middle joint, the slewing angle of +/- 44 degrees and the generous ground clearance give the forwarder a small turning radius, agility and good tracking.

The cab moves aside hydraulically. Service lights are provided in the space underneath the cab. Optional equipment include electrical refill pumps for fuel and hydraulic oil and a vacuum pump.

The machine is equipped with a patented balanced bogie and has excellent ground clearance. High tractive force ensures drive even in the roughest of terrains. Several tyre and chain options are available. The six-wheeled machine has a rigid front axle.

TECHNICAL DATA 810D 1110D

	810D	1110D 6W	1110D 8W
LOAD RATING [kg]	9,000	12,000	12,000
DIESEL ENGINE	John Deere 4045 HTJ	John Deere 6068 HTJ	
Power Output [kW] @ [rpm]	86 @ 2,000	120 @ 2,000	
Torque [Nm] @ [rpm]	498 @ 1,400	719 @ 1,400	
Fuel Tank [l]	110	150	
TRANSMISSION	Hydrostatic-mechanical 2-speed Gearbox	Hydrostatic-mechanical 2-speed Gearbox	
Tractive Force [kN]	110	150	
Speed, mode 1 [km/h]	0 - 8	0 - 8	
mode 2 [km/h]	0 - 23	0 - 23	
STEERING	Proportional Frame Steering, Steering Angle +/- 44°		
BRAKES	Service and working brakes are hydraulically actuated, oil-immersed multi-disc brakes. Spring-actuated parking and emergency brakes. ISO 11169.		
AXLES/BOGIES	Balanced gear bogie axles; Hydro-mechanical differential lock at the front and the rear	Rigid axles at the front; Balanced gear bogie axles at the rear; Hydro-lock at the front and the rear	Balanced gear bogie axles; Hydro-mechanical differential lock at the front and the rear
ELECTRICAL SYSTEM			
Voltage	24 V	24 V	
Batteries	2 x 115 Ah	2 x 145 Ah	
Alternator	100 A (28 V)	100 A (28 V)	
Working Lights	8 x 140 W Twin Power, Xenon lights also available	8 x 140 W Twin Power, Xenon lights also available	
HYDRAULICS	Load-sensing, with power control	Load-sensing, with power control	
Pump Volume [cm³]	74	125	
Working Pressure [Mpa]	24	21.5	
Hydraulic Tank [l]	78	140	
BOOM	CF1	CF5	
Maximum Reach Lengths [m]	7.2 / 8.7 / 9.8	7.2 / 8.5 / 10.0	
Gross Lifting Torque [kNm]	76	102	
Slewing Torque [kNm]	19	24	
Slewing Angle [°]	380	380	
CAB	Safe and in conformity with ISO standards.		
CONTROL SYSTEM	TMC or PC/Windows-based Timbermatic 700		
OPTIONAL EQUIPMENT	For details, please contact your local dealer.		

	810D	1110D 6W	1110D 8W

MEASUREMENTS [mm]*

	810D	1110D 6W	1110D 8W
A Length			
- Standard Wheelbase	8,030	9,425 / 9,700	
- Long Wheelbase	8,695	9,825 / 10,316	
B Bogie Boss - Centre Joint	1,850	1,700	
C Centre Joint - Bogie Boss	2,393 (2,693)	3,300 (3,700)	
D Guard Screen - Bogie Boss	2,417 (2,717)	2,556 (2,956)	
E Bogie Boss – Rear			
- Standard Wheelbase	1,379	2,025 / 2,300	
- Long Wheelbase	1,744	2,025 / 2,516	
F Width			
- 500 tyres	2,300	--	--
- 600 tyres	2,530	2,700	2,700
- 700 tyres	2,670	2,880	2,880
- 800 tyres	--	--	3,106
G Minimum Transportation Height	3,780	3,700	3,700
H Ground Clearance	595	605	605

LOAD SPACE OPTIONS *

	810D Narrow	810D Standard	810D Wide	1110D Standard	1110D Wide	1110D VLS
I Overall Length [mm]						
- Standard Wheelbase	3,840	3,840	3,840	4,581 / 4,856	4,581 / 4,856	4,581
- Long Wheelbase	4,490	4,490	--	4,981 / 5,472	4,981 / 5,472	--
J External Width [mm]	2,280	2,450	2,590	2,566	2,760	2,663 - 3,303
Cross Sectional Area [m²]	3.3	3.4	3.9	4.0	4.3	4.0 - 4.8

* Note! The measurements are nominal and may vary depending on the manufacturing tolerances. (Measurements for the long wheelbase are given in brackets.)

WEIGHT [kg]

	810D	1110D 6W	1110D 8W
Depending on Accessorising, from	10,970	13,670	15,370

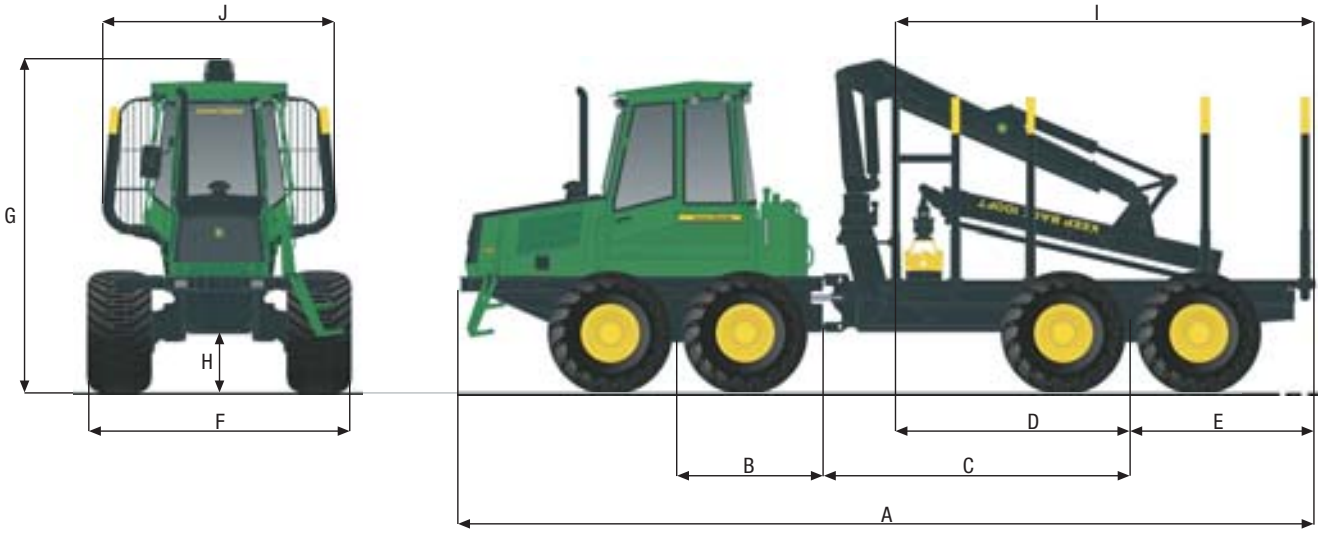

The manufacturer reserves the right to make changes or add improvements at any time without incurring any obligation to make such changes on machines manufactured previously.

FORWARDERS

810D 1110D

NOTHING RUNS LIKE A DEERE.

MAYBE THOSE WORDS ARE THE REASON WHY ALMOST EVERY OTHER PROFESSIONAL LOGGER IS A JOHN DEERE CUSTOMER.

They're just five simple words. Yet they have profound impact on your company. Because at their heart they mean equipment that is built forest tough, with greater productivity, more uptime and lower daily operating costs. They mean a dealer network over 380 locations strong, with immediate access to parts and experts that understand your industry. They mean a dedicated lender in John Deere Credit, committed to helping loggers succeed with competitive financing to enhance cash flow. And they mean a global forestry equipment leader that invests more in R & D than any other manufacturer.
But most of all, these words represent the confidence that comes with over 168 years of heavy equipment experience.

Your world is logging. So is ours. John Deere Forestry. Leading the way, worldwide.

FULL TREE SYSTEM | CUT-TO-LENGTH SYSTEM

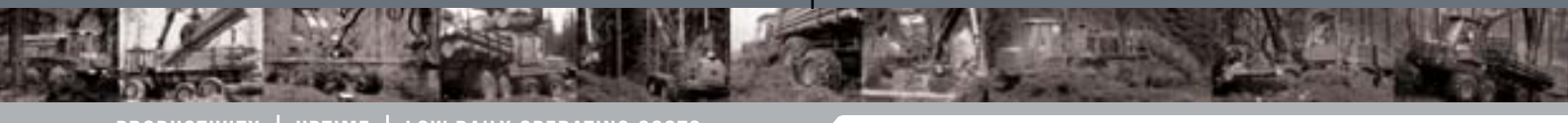

PRODUCTIVITY | UPTIME | LOW DAILY OPERATING COSTS

www.JohnDeere.com

John Deere Forestry Ltd.
Unit 6, Grove Industrial Estate
Castleside Road, Consett
County Durham. Great Britain.
Tel. (0) 1207 583 610
Fax (0) 1207 583 607

John Deere Forestry Ltd.
Ballyknocken
Glenealy
Co. Wicklow. Ireland.
Tel. (0) 404 44969
Fax (0) 404 44972

JOHN DEERE
Nothing Runs Like A Deere