Timberjack

810B

Forwarder

TECHNICAL DATA

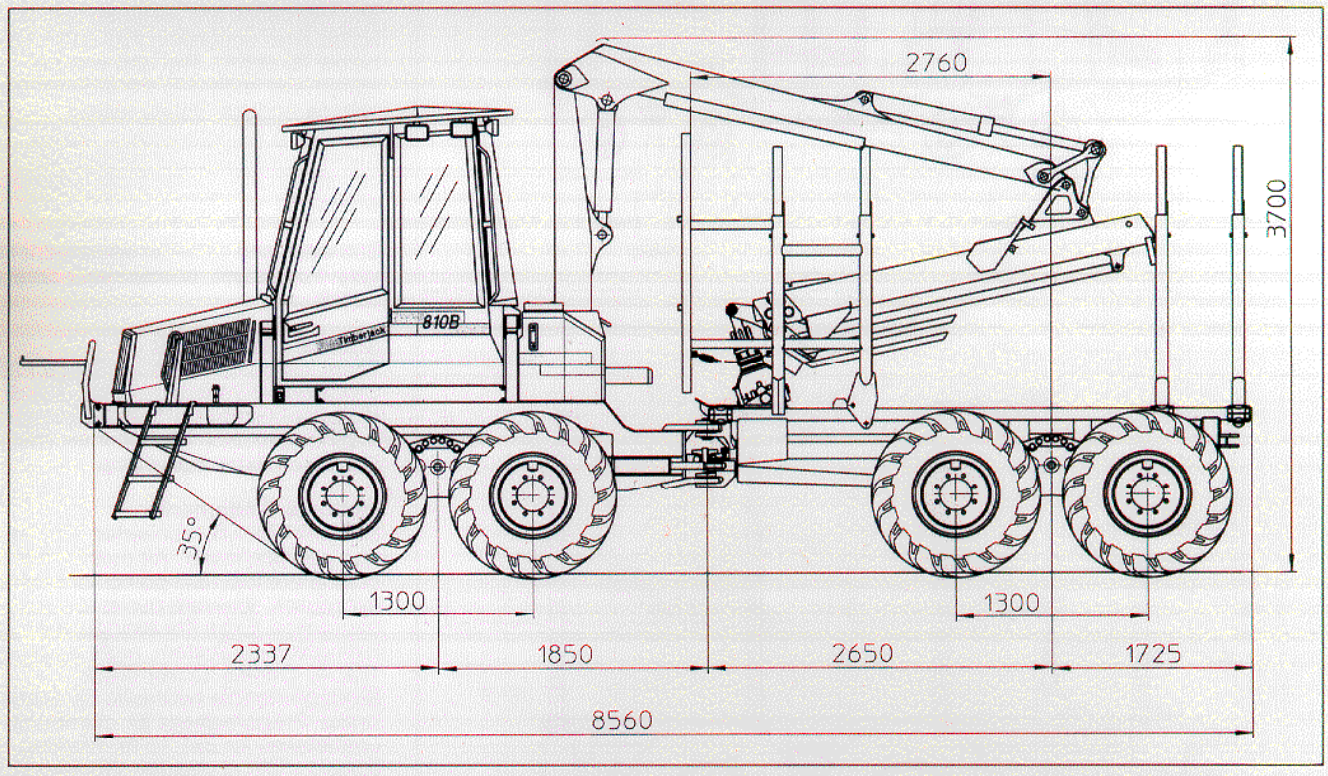

Dimensions
Length 8560 mm
Width 2520 mm (600 tires),
2660 (700 tires).
Transportation height 3700 mm.
Ground clearance 595 mm.
Wheelbase 4500 mm.

Weight
10400-11200 kg depending on options.

Load Area
Lenght 4410 mm for 2x2.5 m.
Width 2450 mm.
Cross section:
2.7 m² for logs longer than 4 m,
3.4 m² for logs shorter than 4 m.
Load rating 8500 kg.
Movable headboard.

Engine
Perkins 1004-4T water-cooled turbocharged 4-cylinder diesel engine. Output 82 kW(111 hp)/2600 rpm. Max. torque 348 Nm/1600 rpm. Fuel tank 110 l.

Transmission
Timberjack TMC (Total Machine Control) system.
Hydrostatic-mechanical power transmission. Range gear with low and high range. Inching, smooth start through pedal without dropping engine revolutions. Travel speed max. 25 km/h. Max. tractive force 110 kN.

Axles
Bogie axles with portal type bogie beams including patented balancing units. Similar axles at front and rear. Power transmission through gears in bogie beams. Hydraulically operated mechanical differential locks front and rear. Disconnection of rear axle drive with high range.

Steering
Articulated frame steering with two hydraulic steering cylinders. Steering angle ±40°. Proportional steering with electric joystick.

Tires
Front and rear 600-22.5, optional 700-22.5.

Brakes
Service and working brakes are hydraulically actuated, oil immersed multiple disc brakes. Identical in both axles. Spring actuated parking and emergency brakes in front and rear bogie.

Hydraulic system
Timberjack TMC system.
Load-sensing hydraulic system with power control. Working pressure 24 MPa. Pump capacity: working hydraulics 178 l/min, power train 180 l/min. Hydraulic oil reservoir volume 85 l.

Electrical system
Voltage 24 V. Batteries 2x105 Ah.
Alternator 100 A/28 V.
Working lights 8x140 Twin Power.

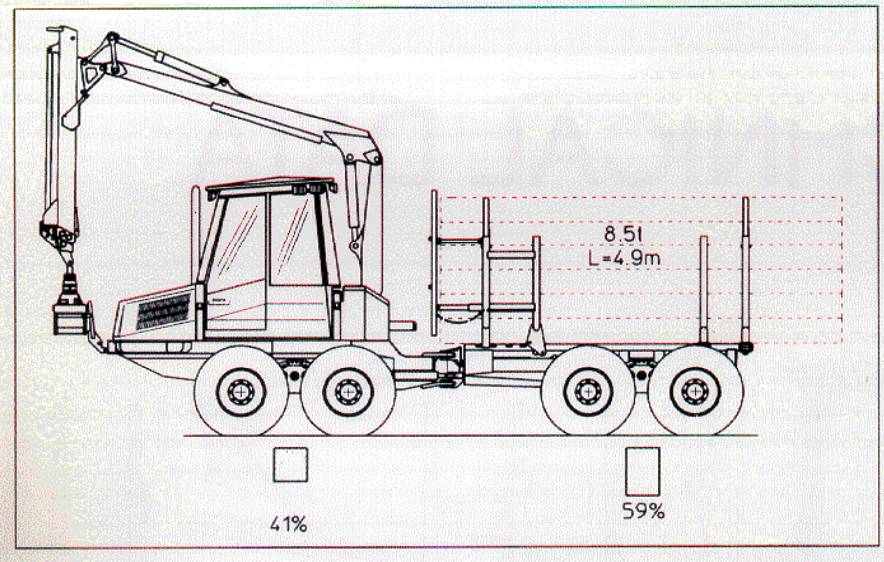

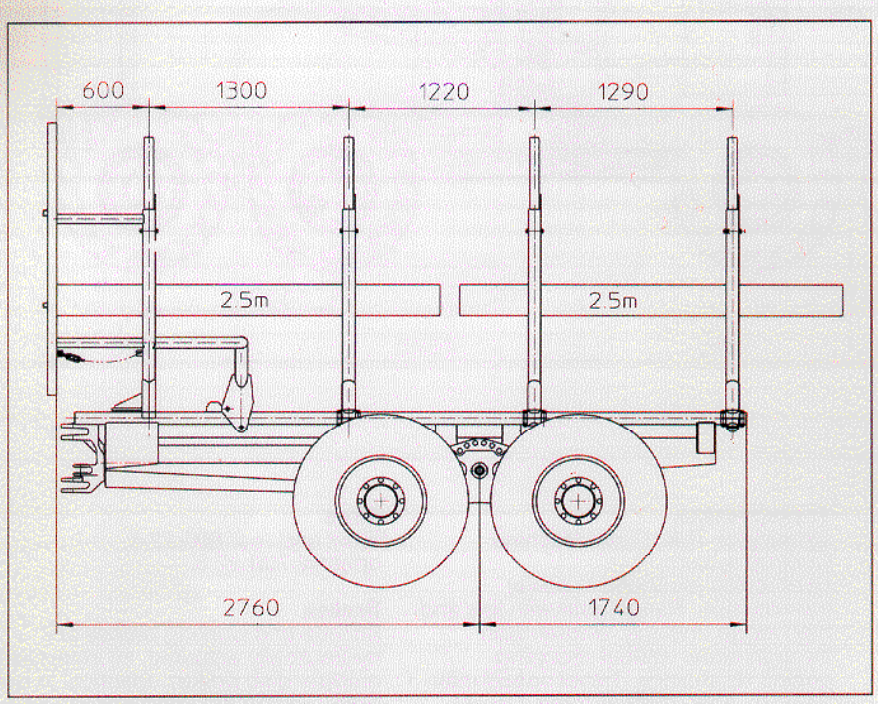

Loader
F51 FH 65
Lift moment gross 64 kNm.
Reach 6.5 m, optional 8.7 m or 9.6 m.

Cab
Spaciuos, light and comfortable cab giving the operator exellent vision in all directions. Efficient heating and air-conditioning. Thanks the unique mounting of the cab, the noise level and vibrations are exceptionally low. Noise level according ISO 5131:1993 below 70 dB(A). The cab can be raised and shifted to the side for easy service access. Safety tested according ISO-standards. Radio/ casette recorder. Connection for cellular phone. Tinted polycarbonate windows.

Standard and optional equipment may vary. For details, contact your local dealer.

Standard equipment
Tools. Operators Manual. Spare Parts Catalogue. Fire extinquisher. Travel distance display on TMC. Constant engine revolution regulator on TMC. Engine oil extraction pump.

Optional equipment
Exhaust catalytic converter. Engine and cab preheater. Air cushioned seat. Electrical refill pump for hydraulics. Vacuum pump for hydraulics. Extra fire extinguisher. Fire Extinguishing System, night automatic. Tracks. Chains. Dozer blade. Biodegradeable hydraulic oil. Stability brake. Preparedness for clambunk. Loadstakes for 3x1.15 m. Working lights 2x70W on loader. Working lights 2x70W on cabin lower corner.

All rights to alterations reserved.

Timberjack Europe

Timberjack AB
P. O. Box 502
S-19525 Märsta, Sweden
Tel. +46 8 591 252 00
Fax +46 8 591 112 61

Timberjack

Timberjack Group • A Member of Rauma Corporation