Timberjack

810B

Forwarder

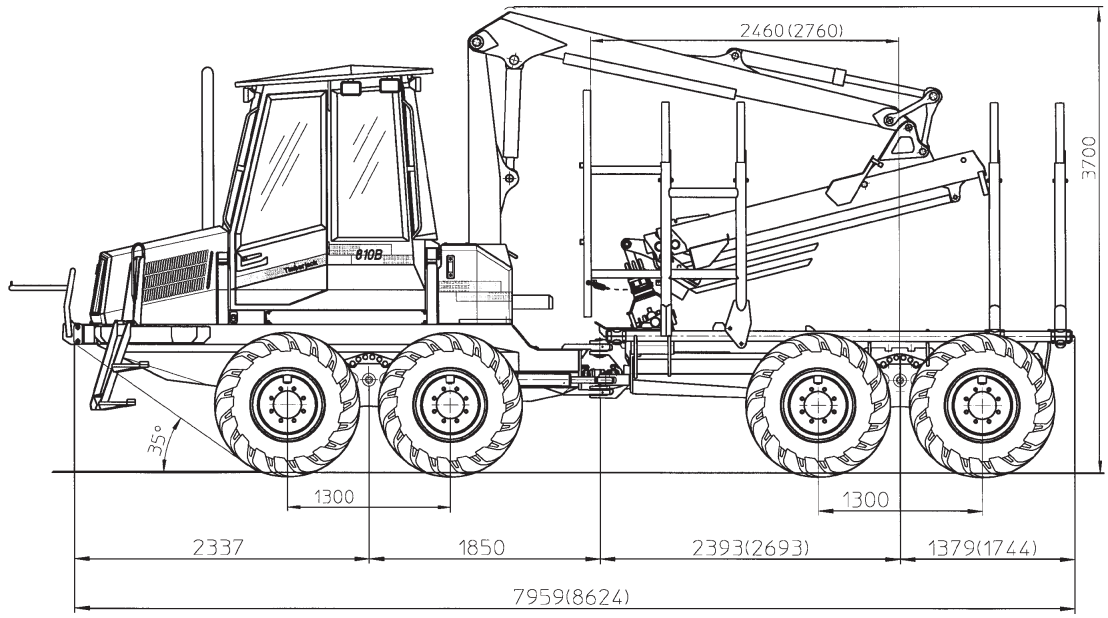

Technical Data

Application
Small class 8-wheel forwarder.
Most suitable for first thinnings with fairly short hauling distance.
Load rating 8500 kg.

Dimensions

Length	*7959/8624 mm
Width	2280 mm (500 tires)
	2520 mm (600 tires)
	2660 mm (700 tires)
Transportation height	3700 mm
Ground clearance	595 mm
Wheelbase	*4243/4543 mm

**standard/optional*

Weight
10400-11200 kg depending on options.

Engine
Perkins 1004-40T water-cooled turbocharged 4-cylinder diesel engine.

Output	81 kW(109 hp)/2400 rpm
Max. torque	394 Nm/1400 rpm
Fuel tank	110 l

Transmission
Timberjack TMC® (Total Machine Control) system. Hydrostatic-mechanical power transmission. Range gear with low and high range. Inching, smooth start through pedal without dropping engine revolutions. Travel speed max. 25 km/h. Max. tractive force 110 kN.

Bogie Axles
Portal type bogie beams with patented balancing units. Similar axles at front and rear. Power transmission through gears in bogie beams. Hydraulically operated mechanical differential locks front and rear. Disconnection of rear axle drive with high range.

Steering
Articulated frame steering with two hydraulic steering cylinders. Steering angle ±44°. Proportional steering with electric joystick.

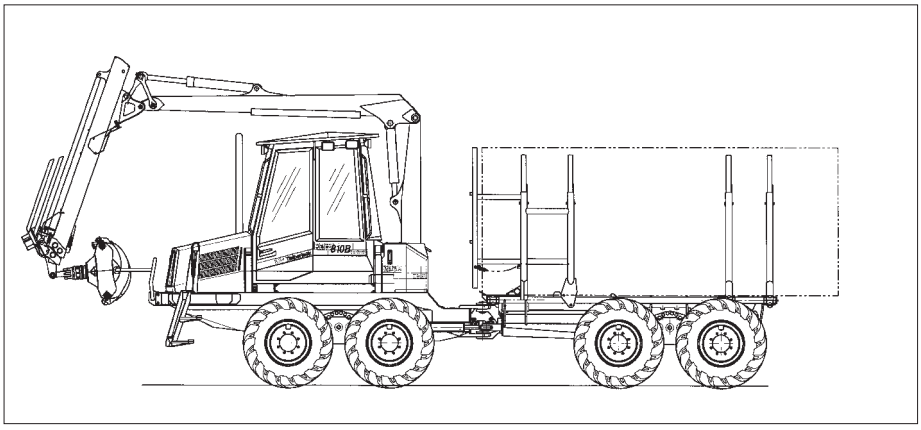

Ground Pressures (in kPa)

Crane to front				
Tire	**Front empty**	**Rear empty**	**Rear 8.5t**	**Rear (tracks) 8.5t**
500	68	23	95	-
600	57	20	80	44
700	49	17	68	40

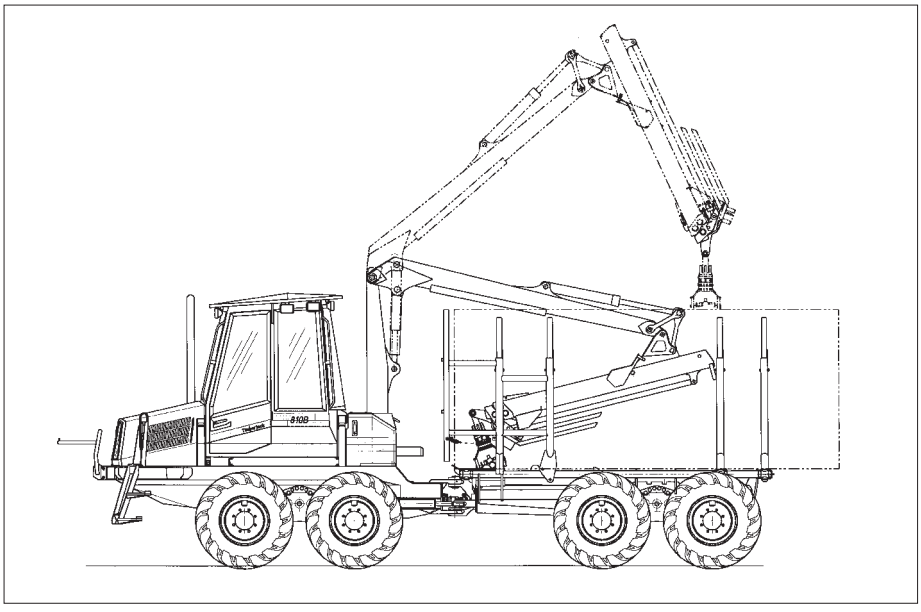

Ground Pressures (in kPa)

Crane to rear				
Tire	**Front empty**	**Rear empty**	**Rear 8.5t**	**Rear (tracks) 8.5t**
500	57	34	106	-
600	48	28	88	49
700	41	24	76	44

Tires

Front and rear	600-22.5
optional	700-22.5
	and 500-22.5

Brakes

Service and working brakes are hydraulically actuated, oil immersed multiple disc brakes. Identical in both axles. Spring actuated parking and emergency brakes for front and rear bogies.

Hydraulic system

Timberjack TMC® system.
Load-sensing hydraulic system with power control. Working pressure 24 MPa. Pump capacity: working hydraulics 74 cc, power train 75 cc. Hydraulic oil reservoir volume 85 l.

Electrical system

Voltage	24 V
Batteries	2x115 Ah
Alternator	100 A/28 V
Working lights	8x140 Twin Power

Cab

Spacious, light and comfortable cab giving the operator excellent vision in all directions. Efficient heating and air-conditioning. Thanks the unique mounting of the cab, the noise level and vibrations are exceptionally low. Noise level according ISO 5131:1993 below 70 dB(A). The cab can be raised and shifted to the side for easy service access. Safety tested according ISO-standards. Radio/cassette recorder. Connection for cellular phone. Tinted polycarbonate windows.

Notice!

Standard and optional equipment may vary. For details, contact your local dealer.

Standard equipment

Tools. Operators Manual. Spare Parts Catalogue. Fire extinguisher. Travel distance display on TMC®. Constant engine revolution regulator on TMC®. Refill pump for hydraulic oil, mechanical. Air cushioned seat. Stability brake.

Optional equipment

Engine, cab and hydraulic oil preheater. Electrical refill pump for hydraulics. Vacuum pump for hydraulics. Extra fire extinguisher. Automatical fire extinguishing system. Tracks. Chains. Dozer blade. Biodegradeable hydraulic oil. Preparedness for clambunk. Loadstakes for 3 x 1.15 m. Working lights 2 x 70W on loader. Working lights 2 x 70W on cabin lower corner. Branch protection kit.

Load Area

The machine is available with two different frame lengths, three different cross sectional areas and three different tire options. This will give a possibility to fit the bunks to carry various log lengths. For example 1 x 3 to 6m, 2 x 2 to 2.5 m and 3 x 1.15m. The tables below will give some dimensions of different variations.

Load Area	Small (option)	Standard	Large (option)	Frame length	Headboard type
Log					
Logs longer than 4 m A=A1	2.2 m^2	2.4 m^2	2.4 m^2	Short/Long	Movable/Fixed
Logs shorter than 4 m A=A2, A3	3.3 m^2	3.4 m^2	4.0 m^2	Short/Long	Movable
2 x 2 m A=A2	3.3 m^2	3.4 m^2	3.3 m^2	Short/Long	Movable/Fixed
2 x 2.5 m A=A2	3.3 m^2	3.4 m^2	NA	Long	Movable/Fixed
3 x 1.15 m A=A2	3.3 m^2	3.4 m^2	NA	Long	Movable/Fixed

Dimensions with different tire and frame options

		B	C	D	E	F	G	H
Tire	500	2280						
	600	2520						
	700	2660						
Frame	Short				2460	1379	1300	600
	Long				2760	1744	1300	600
Load area	Small		3050	2200				
	Standard		3050	2407				
	Large *		2850 / 3140	2592				

* The headboard has a mechanical extension and is available only for short frame version.
It is recommended to be used only with 700 tires.

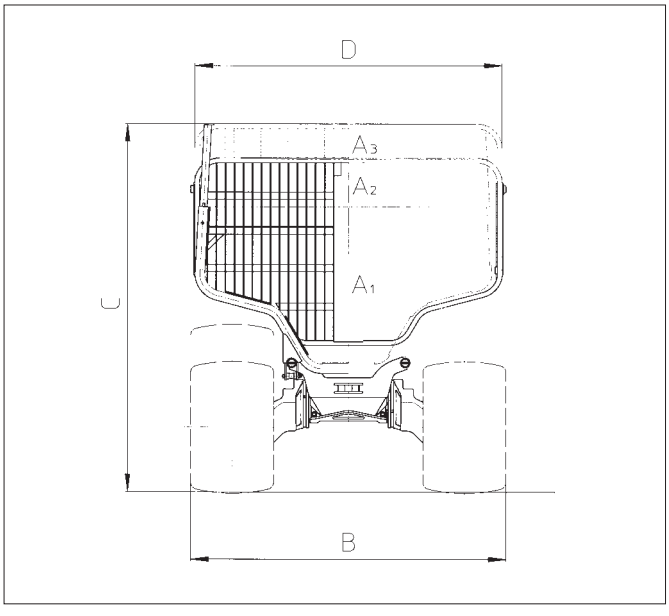

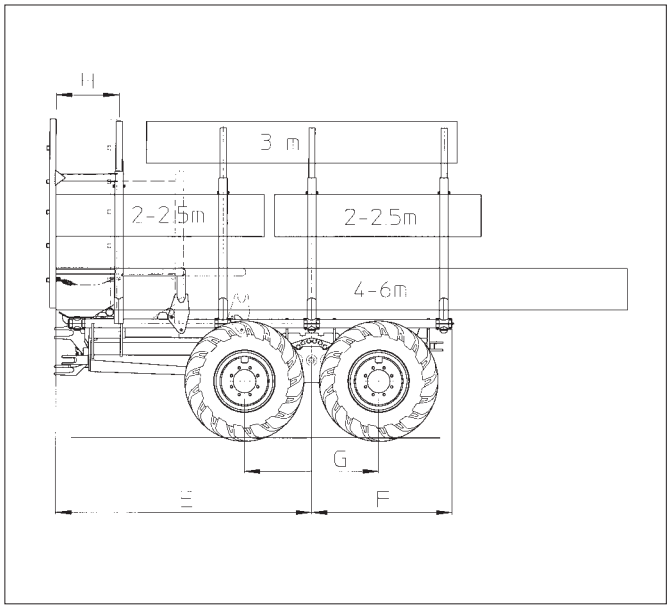

Crane TJ 51F

General for crane
All types the slew torque is 17.5 kNm with the angle 380 degrees.

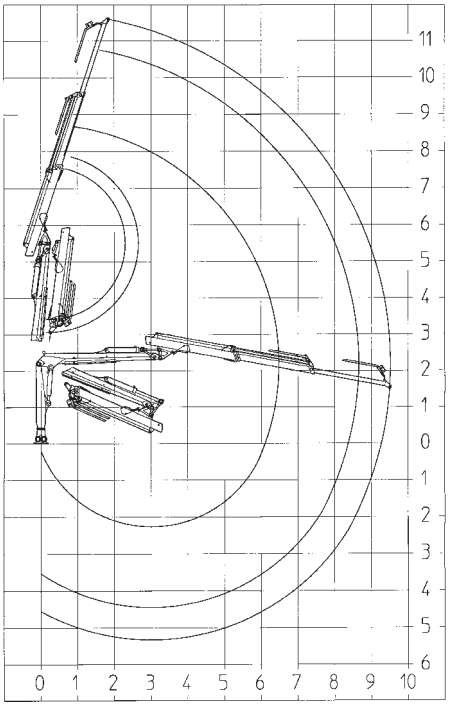

Rotator
The weight 58 kg, torque at 25 MPa
2200Nm

Links
Non damped, single damped or double damped

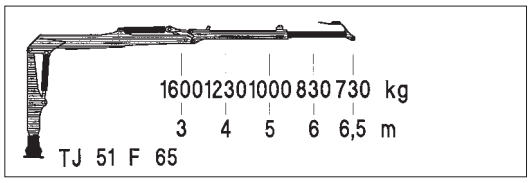

TJ 51F 65
Reach 6490 mm
Length of extension 1170 mm
Lift moment gross 64 kNm
Lift moment net 49 kNm

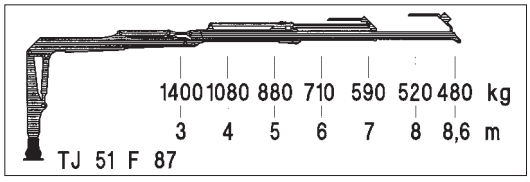

TJ 51F 87
Reach 8650 mm
Length of extension 3000 mm
Lift moment gross 64 kNm
Lift moment net 43 kNm

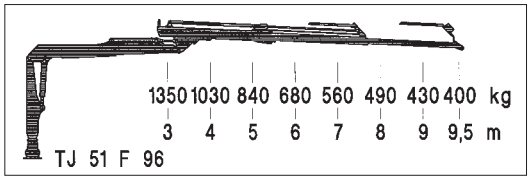

TJ 51F 96
Reach 9530 mm
Length of extension 3900 mm
Lift moment gross 64 kNm
Lift moment net 41 kNm

Lifting capacities without link, rotator and grapple.

Grapple
Available log grapples

Type	Max. load (kg)	Weight (kg)	Grip area (m^2)	A (mm)	F (mm)	C (mm)	D (mm)	B (mm)
Loglift FX 25	4000	160	0,25	1490	384	745	535	860
Loglift FX 35	4000	170	0,35	1575	384	765	570	920
Hultdins 260	3500	150	0,26	1520	384	760	530	867
Hultdins 360	5000	240	0,36	1840	452	800	610	962

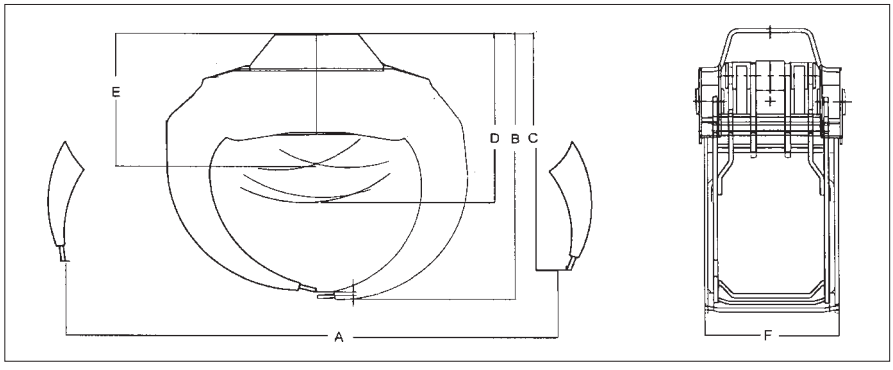

All rights to alterations reserved.

®Timberjack, the donkey symbol and TMC are registered trademarks of Timberjack Inc. Offset Ulonen Ky. EN/1/99

Timberjack

Doing more

Timberjack Group · A Member of Rauma Corporation
www.timberjack.com