Timberjack

1710B

Forwarder

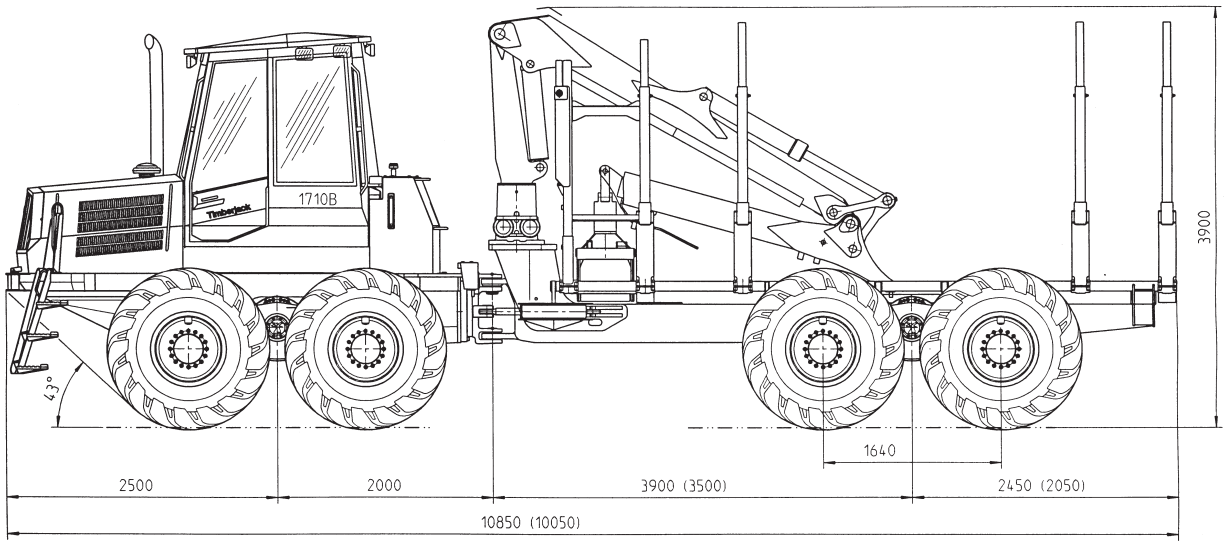

Technical Data

Dimensions

Length	10 850 mm
(optional)	10 050 mm
Width	3040 mm (750-tires)
(optional)	3000 mm (650-tires)
Transportation height	3900 mm
Ground clearance (6-wheel)	680 mm
Ground clearance (8-wheel)	730 mm
Wheelbase	5900 mm
(optional)	5500 mm
Load rating	17 000 kg

Weight

Depending on options

6-wheel	17 000 kg – 18 000 kg
8-wheel	18 500 kg – 19 500 kg

Load space

Length	5560 mm
(optional)	4760 mm
Width	2953 mm
Cross sectional area	5,3 m^2

Hydr. movable headboard 4 bunks, 8 stakes

Engine

Cummins 6CT-8.3, water-cooled turbo-charged 6-cylinder diesel engine

Output	160 kW / 2200 rpm
Max. torque	872 Nm / 1500 rpm
Fuel tank capacity	180 l

Transmission

Timberjack TMC (Total Machine Control) - system. Hydrostatic-mechanical power transmission. Range gear with low and high range. Power distributed between the front and rear axles. Off-road driving, smooth no-surge start without dropping engine speed. Release of rear-wheel drive. Travel speed max. 23 km/h. Max. tractive force 200 kN.

Axles

Bogie axles with portal type bogie beams including patented balancing units. Similar axles at front and rear on 8-wheel. Hub planetaries in 6-wheel front axle. Power transmission through gears in bogie beams. Hydraulically operated mechanical differential lock in front and rear. Disconnection of rear axle drive with high range.

Steering

Articulated frame steering with two hydraulic steering cylinders. Steering angle 42. Proportional steering with electric joystick.

Tires

	8 W	6 W
Front	750/55x26.5/20	700/70x34/16
(optional)	650/65x26.5/20	--
Rear	750/55x26.5/20	750/55x26.5/20
(optional)	650/65x26.5/20	650/65x26.5/20

Brakes
Service and working brakes are hydraulically actuated, oil immersed multiple disc brakes. Identical in both axles. Spring actuated parking- and emergency brakes in front and rear bogies. According to ISO 11169.

Hydraulic system
Timberjack TMC-system. Load-sensing hydraulic system with power control.

Pressure	21,5 Mpa
Pump volume	140 cc
Hydraulic oil reservoir	190 l

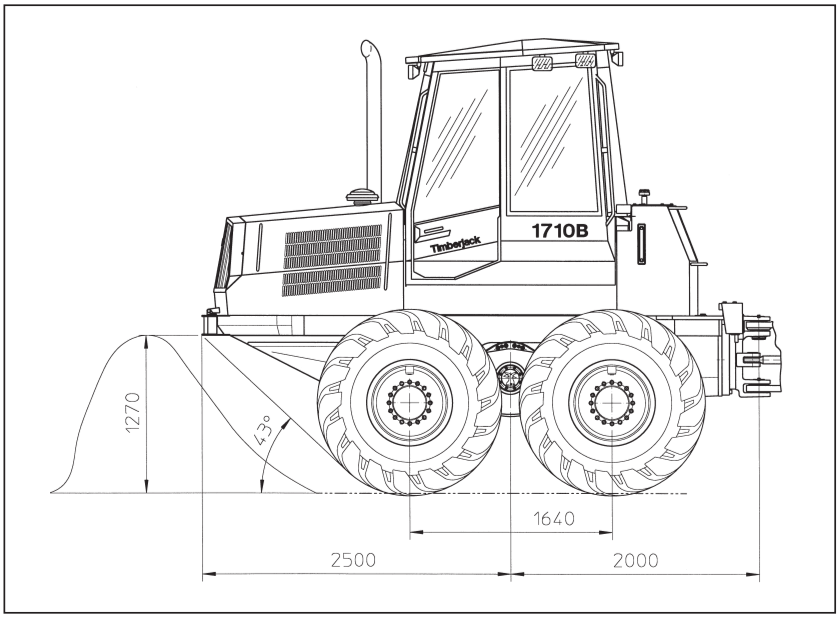

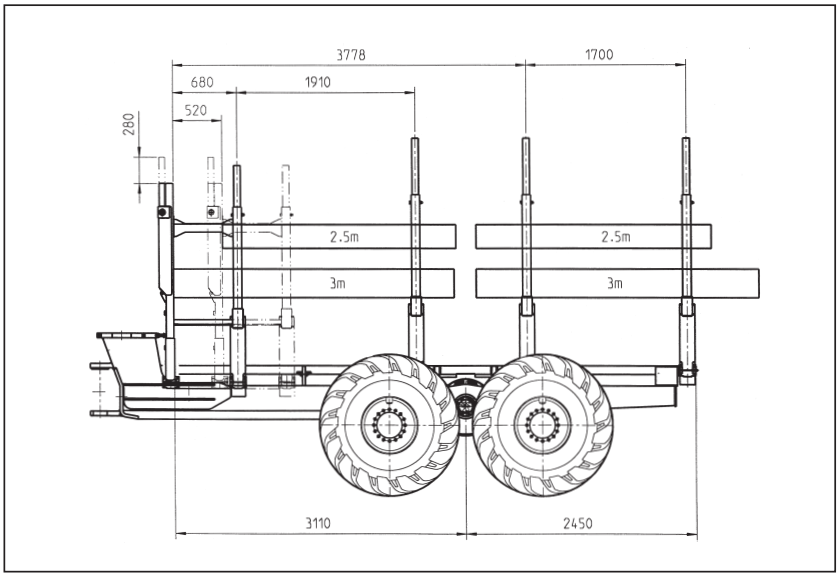

Electrical system

Voltage	24 V
Batteries	2 x 140 Ah
Alternator	140 A / 24 V
Working lights	10 x 140 Twin Power

Cab
Spacious, light and comfortable cab giving the operator excellent vision in all directions. Efficient heating and air conditioning. The cab meets ISO standards for ROPS, FOPS, OPS. Thanks to the unique mounting of the cab, the noise level and vibrations are low. Noise level below 70 dB(A) (according to ISO 5131:1993). The cab can be raised and shifted to the side for easy service access. Radio/cassette receiver. Connection for cellular phone. Tinted poly-carbonate windows. Air cushioned seat with air locked seat swivel.

Standard equipment
Timberjack TMC (Total Machine Control) • Fire extinguisher ABE III / 5 kg • Sprinkler system • Hydraulic steps • Stability brake • Engine oil drain hose • Mineral hydraulic oil • Vacuum pump for hydraulic system • Mechanical refill pump for hydraulics • Exhaust pipe support • Tow hook – 25tn • Tool box with service tools • Spare Parts Catalogue/Operator's manual

Optional equipment
Decking blade • Steel wire branch protection • Engine hood front protection • Preheater 7.5 kW: engine, cabin and tank • Biodegradable hydraulic oil • Electrical hydraulic oil refill pump • Portable electrical fuel refill pump Separate 550 l. fuel tank • Chains, tracks • Sun-blinds in all windows • Spare tire and wheel rim

Crane TJ 111 F

General for crane
In both types the slew torque is 41 kNm with the angle 380 degrees and the gross lifting moment 151 kNm.

TJ 111 F 85

Reach	8,5 m
Length of extension	2600 mm
Max load at max reach	1610 kg *)

(optional)
TJ 111 F 72

Reach	7,2 m
Length of extension	1350 mm
Max load at max reach	1110 kg *)

*) Without grapple, link and rotator

The manufacturer reserves the right to make changes or add improvements without incurring any obligation to make such changes on machines manufactured previously.

®Timberjack and the donkey symbol are registered trade marks of Timberjack Inc. Printed in Finland by Offset Ulonen Ky EN/03/00

Timberjack

Doing more

www.timberjack.com