Timberjack

1410B

Forwarder

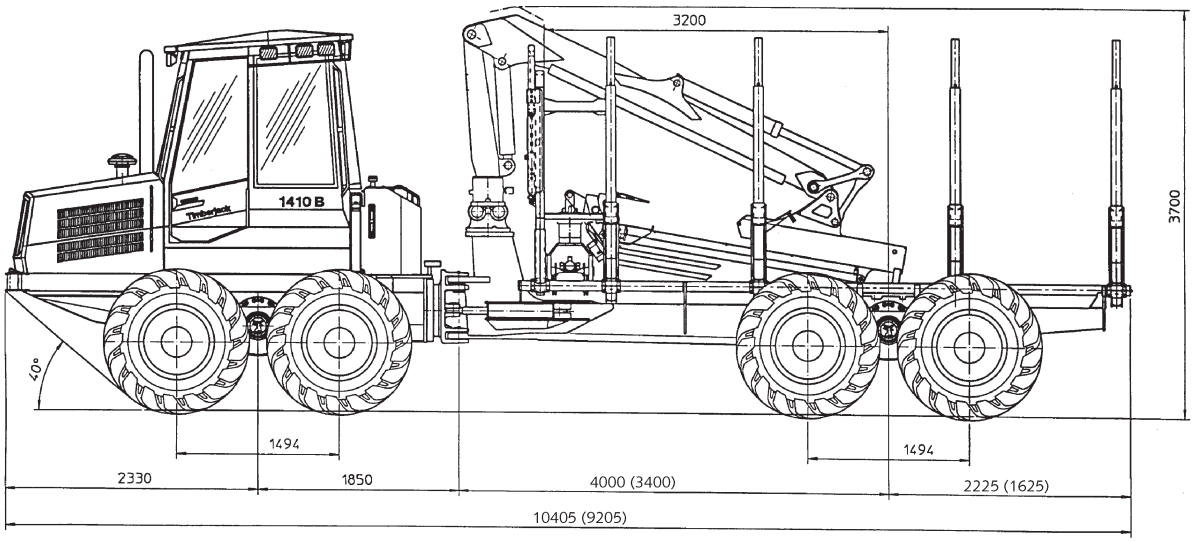

Technical Data

Dimensions

Length	10405 mm
optional	9205 mm
Width	3070 mm (700-tires)
optional	2750 mm (600-tires)
Transport height	3700 mm
Ground clearance	605 mm
Wheelbase	5250 mm
Load rating	14 000 kg

Weight

Depending on equipment

6-wheel	14 500 kg – 15 500 kg
8-wheel	16 000 kg – 17 000 kg

Load space

Length	5425 mm
optional	4225 mm
Width	2760 mm
Cross section	4.6 m^2

Fixed headboard with hydr. extension
4 bunks, 8 stakes

Engine

Cummins 6BTA-5.9, water-cooled turbocharged and inter-cooled 6-cylinder diesel engine

Output	129 kW / 2000 rpm
Max. torque	694 Nm / 1500 rpm
Fuel tank volume	165 l

Transmission

Timberjack TMC® (Total Machine Control) -system. Hydrostatic-mechanical power transmission. Range gear with low and high range. Power distributed between the front and rear axles. Off-road driving, smooth no-surge start without dropping engine speed. Release of rear-wheel drive. Travel speed max. 22 km/h. Max. tractive force 175 kN.

Axles

Heavy-duty bogie axles with portal type bogie beams including patented balancing units. Similar axles at front and rear on 8-wheel. Hub planetaries in 6-wheel front axle. Power transmission through gears in bogie beams. Hydraulically operated mechanical differential lock front and rear. Disconnection of rear axle drive with high range.

Steering

Articulated frame steering with two hydraulic steering cylinders. Steering angle 42°. Proportional steering with electric joystick.

Tires

	8 W	6 W
Front	700/50x26.5/16	700/55x34/14
(optional)	600x26.5/16	600x34/14
Rear	700/50x26.5/16	700/50x26.5/16
(optional)	600x26.5/16	600x26.5/16

Brakes

Service and working brakes are hydraulically actuated, oil immersed multiple disc brakes. Identical in both axles. Spring actuated parking- and emergency brakes in front and rear bogies. According to ISO 11169.

Hydraulic system

Timberjack TMC® -system. Load-sensing hydraulic system with power control.

Pressure	21.5 Mpa
Pump volume	140 cc
Hydraulic oil reservoir	140 l

Electrical system

Voltage	24 V
Batteries	2 x 115 Ah
Alternator	140 A / 28 V
Working lights	10 x 140 Twin Power

Cab

Spacious, light and comfortable cab giving the operator excellent vision in all directions. Efficient heating and air conditioning. The cab meets ISO standards for ROPS, FOPS, OPS. Thanks to the unique mounting of the cab, the noise level and vibrations are low. Noise level below 70 dB(A) (according to ISO 5131:1993). The cab can be raised and shifted to the side for easy service access. Radio/cassette receiver. Connection for cellular phone. Tinted polycarbonate windows. Air cushioned seat with air locked seat swivel.

Standard equipment

Timberjack TMC® (Total Machine Control)
Hydraulic headboard transfer with hydraulic extension
Stability brake
Tow hook
Electrical refill pump for hydraulic oil
Engine oil drain hose
Vacuum pump
Mineral hydraulic oil
Fire extinguisher, 5 kg
Sprinkler system
Hydraulic steps
Exhaust pipe guard
Neck support
Tool box
Spare parts catalogue/Operator's manual
Decals in English

Optional equipment

Load space 4.6 m^2
Preparedness for clambunk
Steel wire branch protection
Engine hood front protection
Biodegradable hydraulic oil
Separate 550 l fuel tank
Mechanical fuel refill pump
Portable electrical fuel refill pump
Decking blade
Wipers on all windows
Sun blinds in all windows
Chains, tracks
Spare wheels and wheel rims

Loader TJ 71 F

General for loader

In all types the slew torque is 24.4 kNm with the angle 380° and the gross lifting moment 99 kNm.

TJ 71 F 85

Reach	8.5 m
Length of extension	2650 mm
Max. load at max. outreach	800 kg

(optional)
TJ 71 F 72

Reach	7.2 m
Length of extension	1400 mm
Max. load at max. outreach	1080 kg

(optional)
TJ 71 F 100

Reach	10 m
Length of extension	4200 mm
Max. load at max. outreach	580 kg

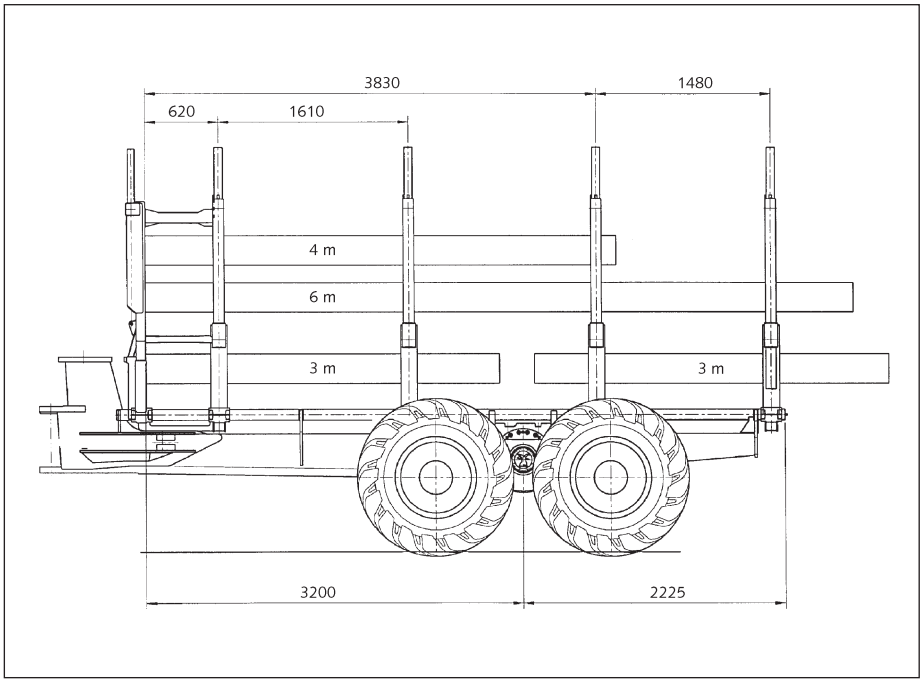

The manufacturer reserves the right to make changes or add improvements without incurring any obligation to make such changes on machines manufactured previously.

®Timberjack and the donkey symbol are registered trademarks of Timberjack Inc. Printed in Finland by Offset Ulonen Oy, EN/1/01

Timberjack
Doing more
www.timberjack.com