Timberjack

1210B

Forwarder

TECHNICAL DATA

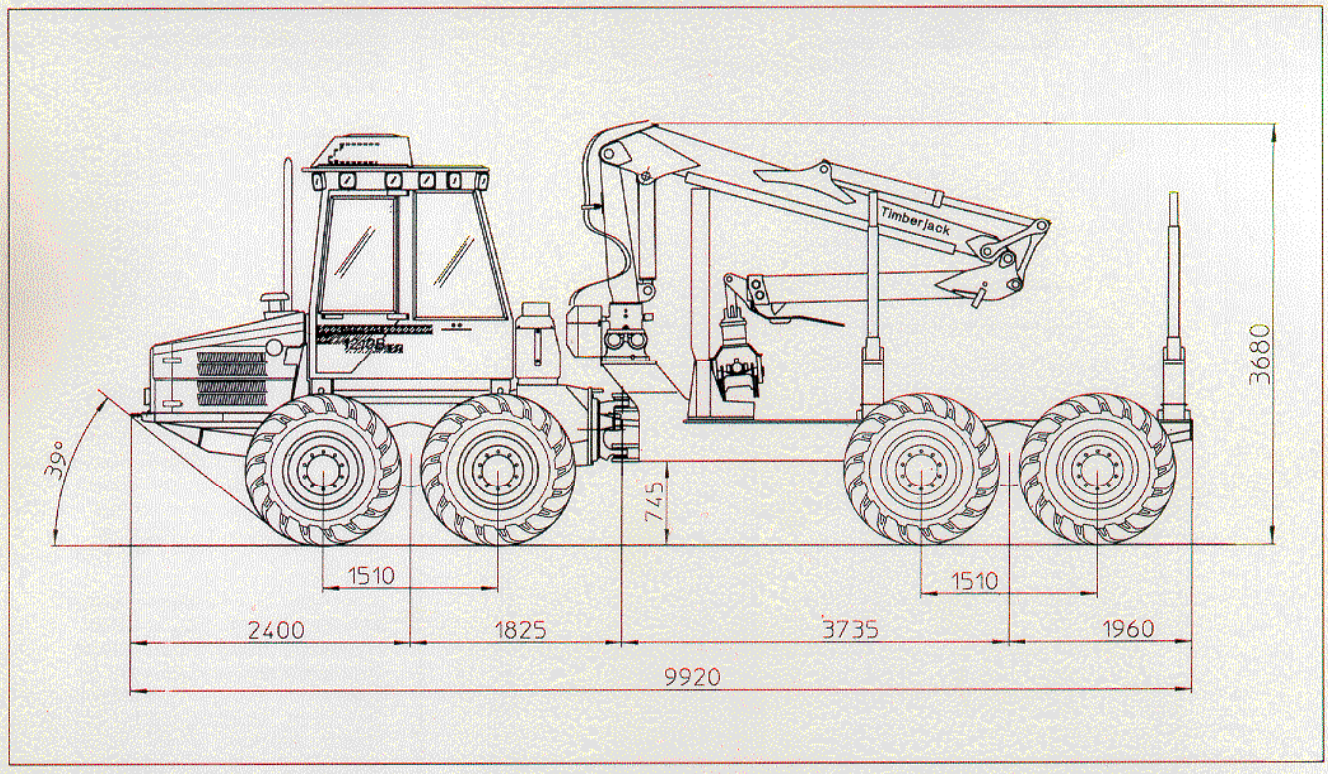

Dimensions
Length 9920 mm
Width 2640 mm (600 tires),
2840 (700 tires)
Transportation height 3680 mm
Ground clearance 575 mm 6-wh, 605 mm 8-wh
Wheelbase 5560 mm

Weight
6-wh 12,900-14,900 kg depending on options, 8-wh 14,100-16,500 kg depending on options.

Load Area
Length 4850 mm for 2x2.5 m.
Width 2640 mm.
Cross section:
3.7 m² for logs longer than 4 m,
4.5 m² for logs shorter than 4 m.
Load rating 14,000 kg. Fixed headboard with hydraulic headboard extension.

Engine
Perkins 1006-6TW Intercooler water-cooled turbocharged 6-cylinder diesel engine. Output 127 kW(173 hp)/2200 rpm. Max. torque 605 Nm/1600 rpm. Fuel tank 140 l.

Transmission
Timberjack TMC (Total Machine Control) system. Hydrostatic-mechanical power transmission. Range gear with low and high range. Inching, smooth start through pedal without dropping engine revolutions. Travel speed max. 25 km/h. Max. tractive force 150 kN.

Axles
Power transmission through gears in the balanced bogies. Similar axles at front and rear on 8-wh. Hydraulically operated mechanical differential locks front and rear. Disconnection of rear axle drive with high range.

Steering
Articulated frame steering with two hydraulic steering cylinders. Steering angle ±40°. Proportional steering with electric joystick.

Tires
6-wh front 600-34 and rear 600-26.5, optional front 700-34 and rear 700-26.5. 8-wh 600-26.5, optional 700-26.5.

Brakes
Service and working brakes are hydraulically actuated, oil immersed multiple disc brakes. Identical in both axles. Spring actuated parking and emergency brakes in front and rear bogie.

Hydraulic system
Timberjack TMC system.
Load-sensing hydraulic system with power control. Working pressure 21.5 MPa. Pump capacity: working hydraulics 280 l/min, power train 220 l/min. Hydraulic oil reservoir volume 145 l.

Electrical system
Voltage 24 V. Batteries 2x130 Ah. Alternator 100 A/28 V. Working lights 8x140 Twin Power.

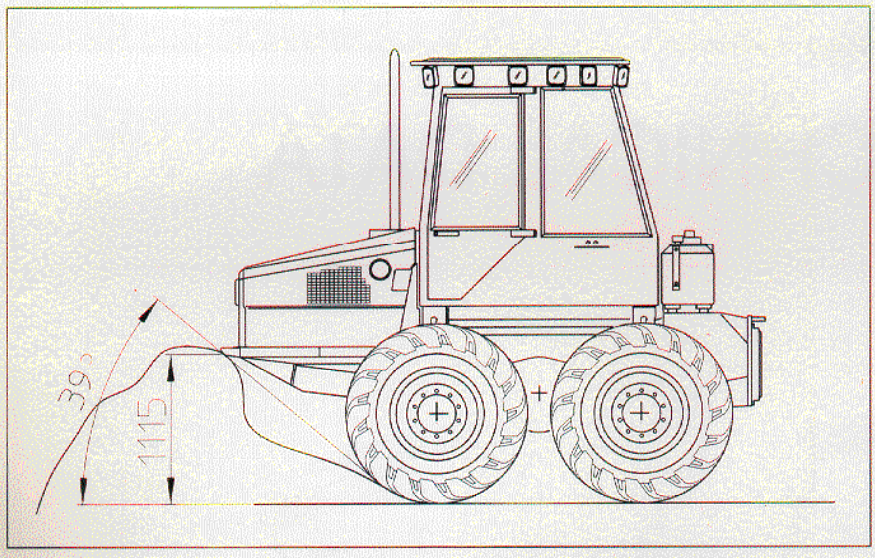

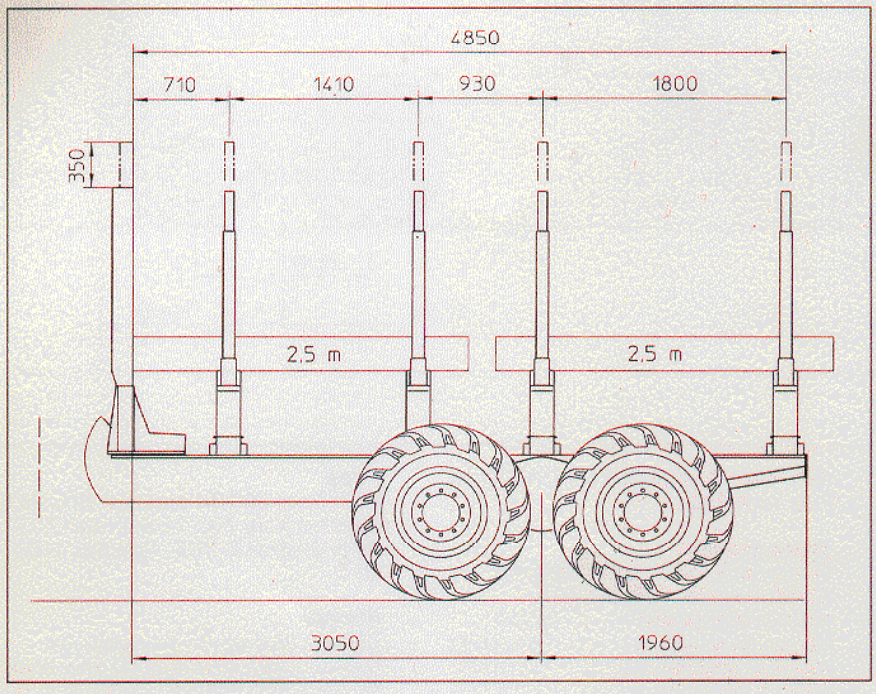

Loader
F71 F72
Lift moment gross 99 kNm. Reach 7.2 m, optional 8.5 m.

Cab
Spacious, light and comfortable cab offers excellent visibility in all directions. Efficient heating and air-conditioning. Noise level meets ISO 5131:1993 below 72 dB(A). Safety tested according to ISO-standards. Radio/casette recorder. Connection for cellular phone. Tinted polycarbonate windows.

Standard equipment
Tools. Operator's Manual. Spare Parts Catalogue. Fire extinguisher. Travel distance gauge and constant engine revolution regulator (TMC system). Stability brake. Mechanical engine oil extraction pump. Mechanical refill pump for hydraulic oil. Exhaust pipe support.

Optional equipment
Exhaust catalytic converter. Engine,cab and hydraulic tank preheater. Air cushioned seat. Electrical refill pump for hydraulics. Vacuum pump for hydraulics. Portable electrical refill pump for fuel. Rear side window wipers. Portable air compressor kit. Extra fire extinguisher. Fire Extinguishing System, night automatic or Fire Alarm System. Tracks. Chains. Spare wheel. Hydraulic steps. Dozer blade. Biodegradeable hydraulic oil. Clambunk fittings. Loadstakes for 3x1.15 m. Working lights: 2x70W on loader. Working lights: 2x70W on rear corners of cab. Skid plates on bogie. Bogie lift.

All rights to alterations reserved.

Timberjack Europe
P. O. Box 474
FIN-33101 Tampere, Finland
Tel. +358 31 241 0111
Fax +358 31 241 0290

Timberjack