Timberjack

810

Forwarder

TECHNICAL DATA

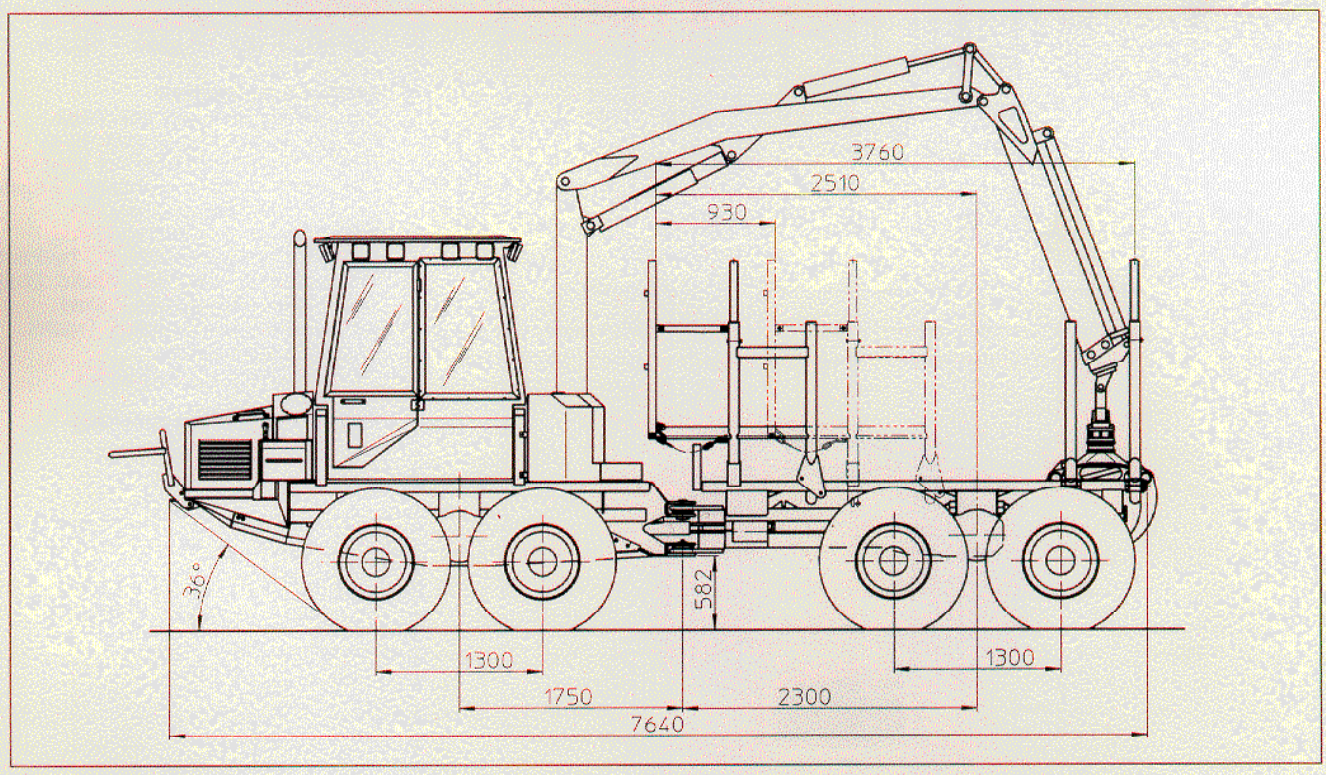

Dimensions

Load rating	8500 kg
Weight	
8-w. basic model	9800 kg
Length overall	7640 mm
Width overall, min/max (depending on tires)	2180/2580 mm
Height (Loglift 50L 65)	3650 mm
Ground clearance	585 mm
Max travel speed	28 km/h
Max tractive effort	92 kN
Fuel tank capacity	115 l

Engine
Output 82 kW (111 HP). Max torque 358 Nm.

Transmission
Hydrostatic-mechanical.
Range gear with low and high range
low speed 0–9 km/h
high speed 0–28 km/h.

Axles
Differentials with mechanical locks, identical in front and rear. Power transmission in bogies through gears.

Brakes
Multiple oil immersed hydraulically operated disc brakes, identical in both axles.

Tires

Standard:	600/50-22.5
Optional:	500/60-22.5
	700/45-22.5

Steering
Hydraulic frame steering with two steering cylinders controlled by hydraulic lever.

Hydraulic system
Operating hydraulics: Constant pressure hydraulic system. Operating pressure 20/24 MPa (2900/3480 psi). Electro-hydraulic 2-lever control of loader.

Electrical system
Voltage 24 V. Batteries 2x105 Ah. Alternator 28 V 100 A. 14 halogen work lights.

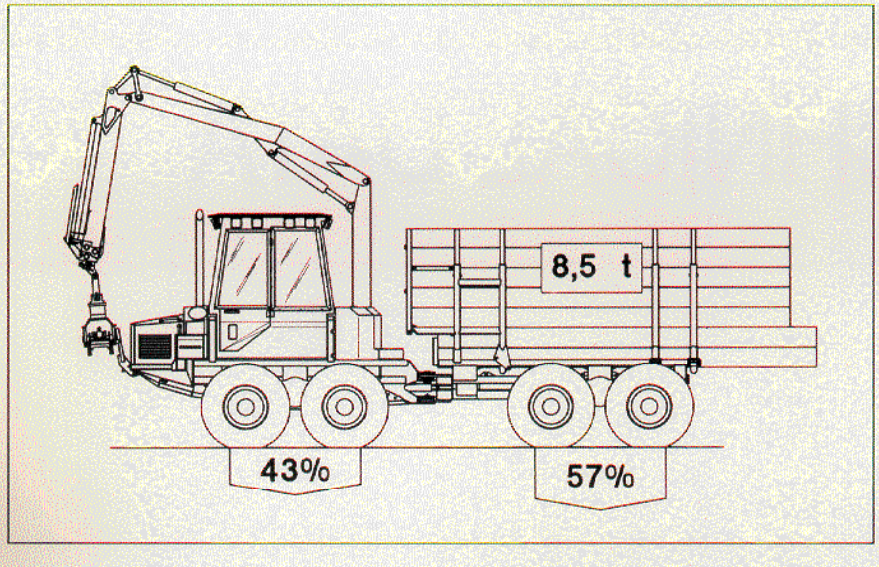

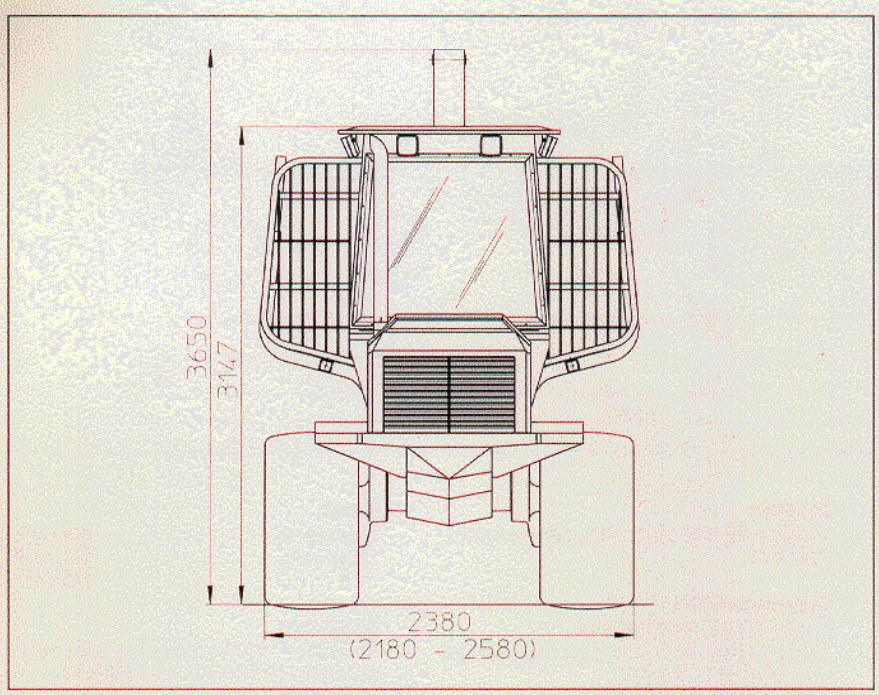

Operator's cab
Comfortable and silent safety cab. Fullfills the ROPS, OPS and FOPS requirements. For service and maintenance cab can be lifted by parallel lifting levers up and sideways.

Loader

	lift moment	max. reach
LF 50 L 65	56 kNm	6.5 m
Optional:		
LF 50 LT 87	56 kNm	8.7 m
LF 50 LT 102	56 kNm	10.2 m

Optional equipment
Air conditioner. Belly pan hoist. Disconnection of rear axle drive. Electrical off-road steering. Electrical fuel pump. Engine preheater. Engine oil extraction pump. Extra fire extinguisher. Fire extinguishing system, nightautomatic. JIC-hydraulic fittings (North-America). Radio. Shake hour meter. Sun blinds. Tinted windows (polycarbonate). Tracks. Chains. Dozer blade.
Vacuum pump for hydraulics.

Right for alterations reserved.

FMG Timberjack Oy
P.O.Box 474, SF-33101 Tampere, Finland
Telephone int. +358 31 2410 111
Telefax +358 31 2410 290
Telefax Spare Parts +358 31 2410 291
Telefax Service +358 31 2410 292
Teletex 244-1031255 lokfor

FMGTimberjack