Timberjack

1410

Forwarder

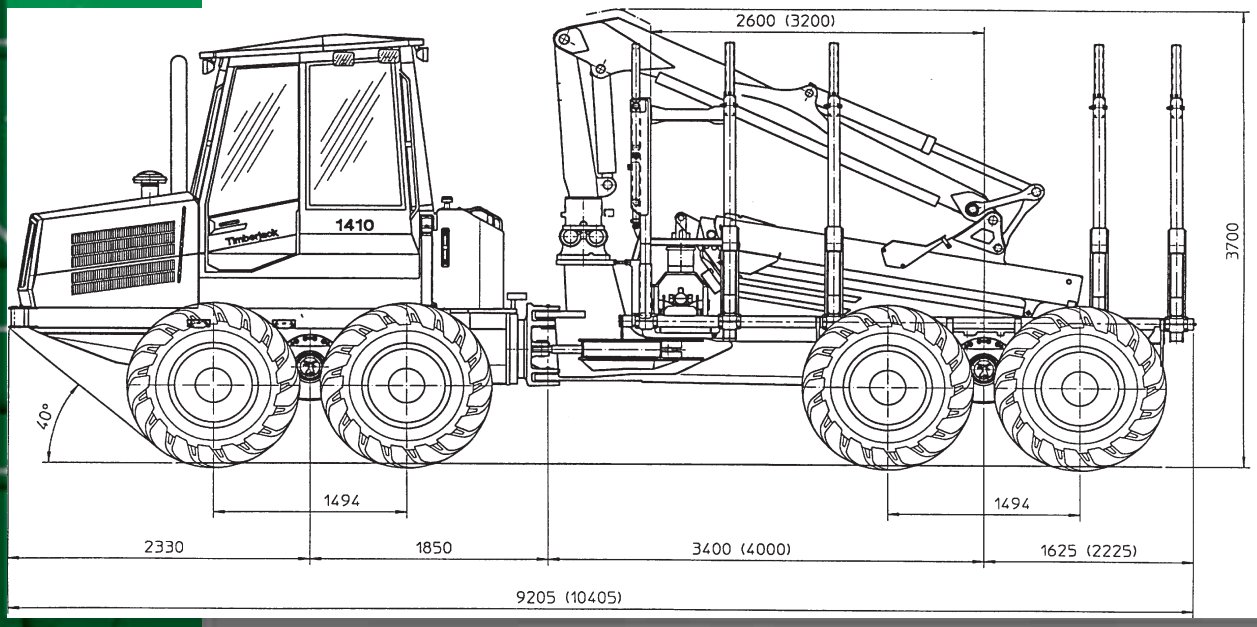

Technical Data

Dimensions

Length	9200 mm
optional	10400 mm
Width	2750 mm
	with 600x26.5-tires
	2930 mm
	with 700x26.5-tires
Transport height	3700 mm
Ground clearance	605 mm
Wheelbase	5250 mm
optional	5850 mm

Weight

These details vary depending on equipment specified.

6-wh	14 000-15 000 kg
8-wh	16 000-17 000 kg

Load Area

Length	4225 mm
optional	5425 mm
Width	2660 mm
Max. cross section	4.6 m^2
Max. load rating	14 000 kg

Engine

Perkins 1006-60TW water-cooled turbocharged 6-cylinder diesel engine.

Max. hp	124 kW(168 hp)/2000 rpm.
Max. torque	663 Nm /1440 rpm.
Fuel tank volume	165 l

Transmission

Timberjack TMC (Total Machine Control) system. Hydrostatic-mechanical power transmission. Range gear with low and high range. Inching, smooth start through pedal without dropping engine revolutions. Travel speed maximum 22 km/h. Maximum tractive force 175 kN.

Axles

Bogie axles with portal type bogie beams including patented balancing units. Similar axles at front and rear on 8-wh. Power transmission through gears in bogie beams. Hydraulically operated mechanical differential locks front and rear. Disconnection of rear axle drive with high range.

Steering

Articulated frame steering with two hydraulic steering cylinders. Steering angle ±42. Proportional steering with electric joystick.

Tires

6-wh	front 600-34 and rear 600-26.5
optional	front 700-34 and rear 700-26.5
8-wh	600-26.5
optional	700-26.5

Brakes
Service and working brakes are hydraulically actuated, oil immersed multiple disc brakes. Identical in both axles. Spring actuated parking and emergency brakes in front and rear bogies.

Hydraulic system
Timberjack TMC system.
Load-sensing hydraulic system with power control. Working pressure 21.5 Mpa. Pump capacity: working hydraulics 255 l/min, power train 250 l/min. Hydraulic oil reservoir volume 140 l.

Electrical system

Voltage	24 V
Batteries	2x115 Ah
Alternator	140 A/24 V
Working lights	10x140 W Twin Power

Loader
Model F71 F 72, telescopic
Gross Lifting moment 99 kNm Reach 7.2 m, optional 8.5 m or 10 m.

Cab
Spacious, light and comfortable cab giving the operator excellent vision in all directions. Efficient heating and air-conditioning. Thanks the unique mounting of the cab, the noise level and vibrations are exceptionally low. Noise level according to ISO 5131:1993 below 70 dB(A).

The cab can be raised and shifted to the side for easy service access. Safety tested according to ISO-standards. AM/FM radio/cassette stereo. Connection for cellular phone. Tinted Lexan polycarbonate windows.

Notice!
Standard and optional equipment may vary. For details, contact your local dealer.

Standard equipment
Tools. Operators Manual. Spare Parts Catalogue. Fire extinquisher. Travel distance gauge and constant engine revolution regulator on TMC. Stability brake. Mechanical steps. Mineral hydraulic oil. Fully adjustable swivel cloth suspension seat. Hydraulic headboard extension.

Optional equipment
Vacuum pump for hydraulics. Electric hydraulic oil filling pump. Portable electric refill fuel pump. Bogie tracks. Chains. Spare wheels. Decking blade. Working lights 2x70W on loader. Working lights 2x70W on cabin lower corner and 1x70 rear light. Hydraulically transferrable headboard. Bio oil. Air cushioned seat. Hydraulic steps.

The manufacturer reserves the right to make changes or add improvments at any time without incurring any obligation to make such changes on machines manufactured previously.

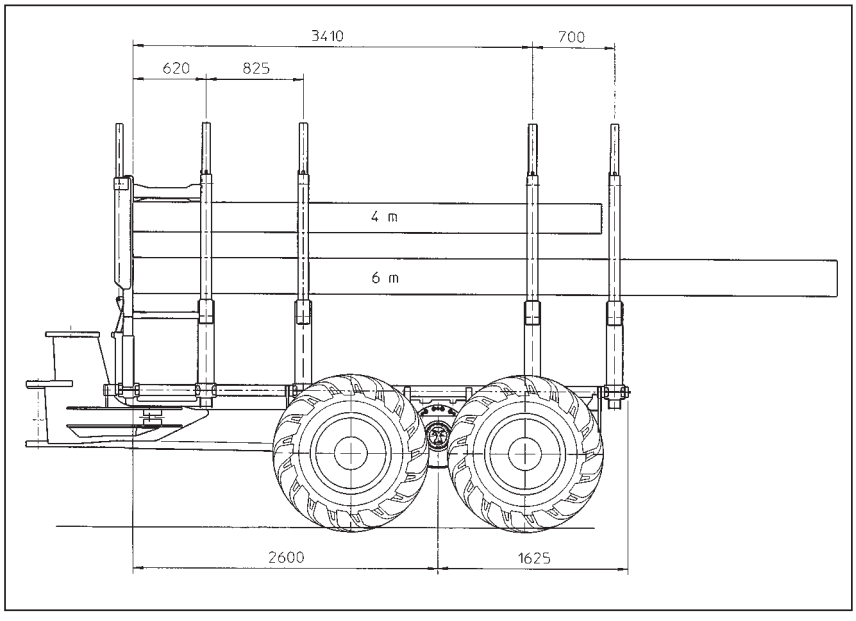

Offset Ulonen Ky. EN/8/98

Timberjack

Doing more

www.timberjack.com