Timberjack

1010 Forwarder

TECHNICAL DATA

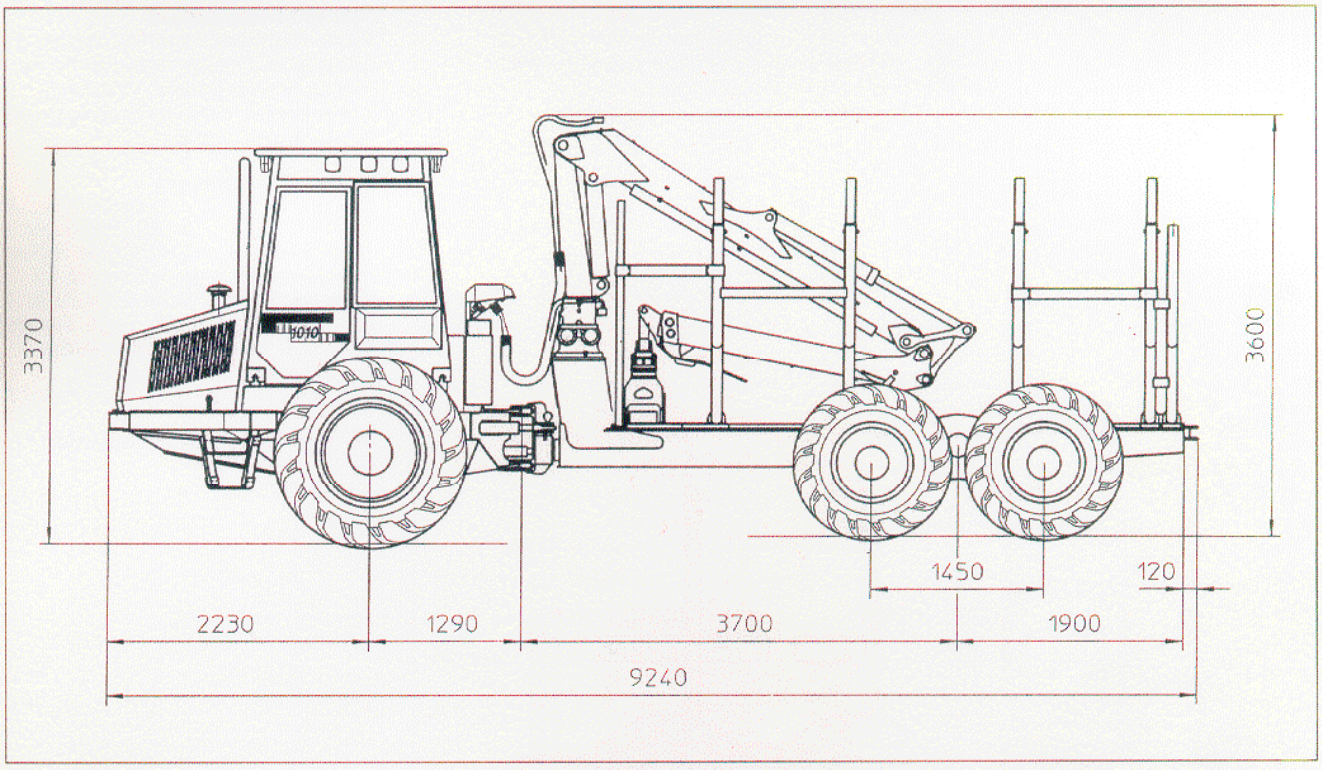

Dimensions

Length	9240 mm
Width	2680 mm (600 tires)
	2880 mm (700 tires)
Transportation height	3600 mm
Ground clearance	600 mm
Wheelbase	4790 mm

Weight
11,400–12,300 kg depending on options.

Load Area
Length 4630 mm for 2x2.5 m
Width 2480 mm
Cross section:
2.7 m² for logs longer than 4 m,
3.6 m² for pulpwood shorter than 4 m.
Load rating 11,000 kg.

Engine
Perkins 1004-4T water-cooled turbocharged 4-cylinder diesel engine. Output 82 kW (111 hp)/ 2400 rpm. Max. torque 348 Nm/ 1600 rpm. Fuel tank 140 l.

Transmission
Powershift transmission with Clark torque converter and low/high range; 2x3 speeds forward and reverse. Travel speed max. 25 km/h.

Axles
Axles equipped with hydraulically operated differential locks. Balanced bogie at rear. Power transmission through gears in bogie beams. Disconnection of rear axle drive.

Steering
Articulated frame steering with two steering cylinders. Steering angle ±40°. Proportional steering with electric joystick.

Tires
Front: 600-34 and rear 600-26,5, optional front 700-34 and rear 700-26.5.

Brakes
Service and working brakes are hydraulically actuated, oil immersed multiple disc brakes. Spring actuated parking and emergency brakes.

Hydraulic system
Load-sensing hydraulic system with power control. Working pressure 21 MPa. Pump capacity 240l/min. Hydraulic oil reservoir volume 110 l.

Electrical system
Voltage 24 V. Batteries 2 x 105 Ah. Alternator 100 A/28 V. Halogen work lights 12 x 70.

Loader
F71 F72
Lift moment gross 99 kNm.
Reach 7.2 m, optional 8.5 m.

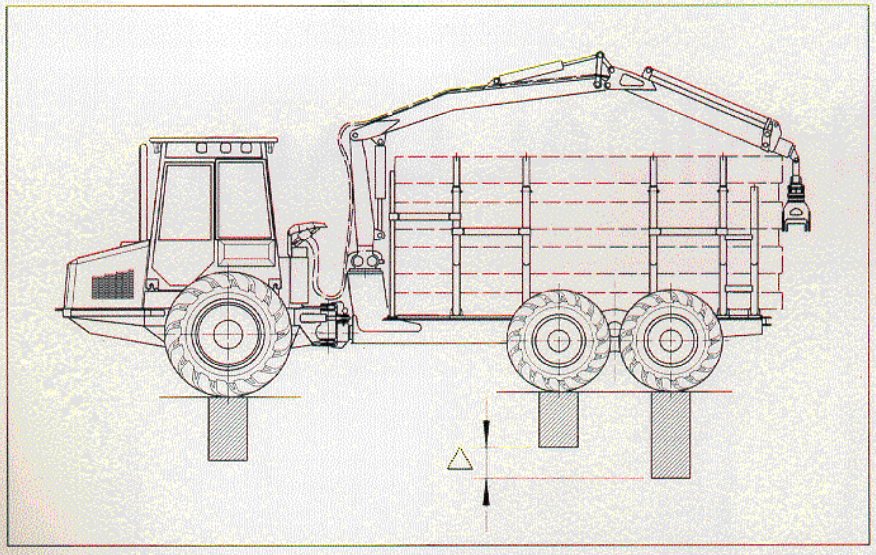

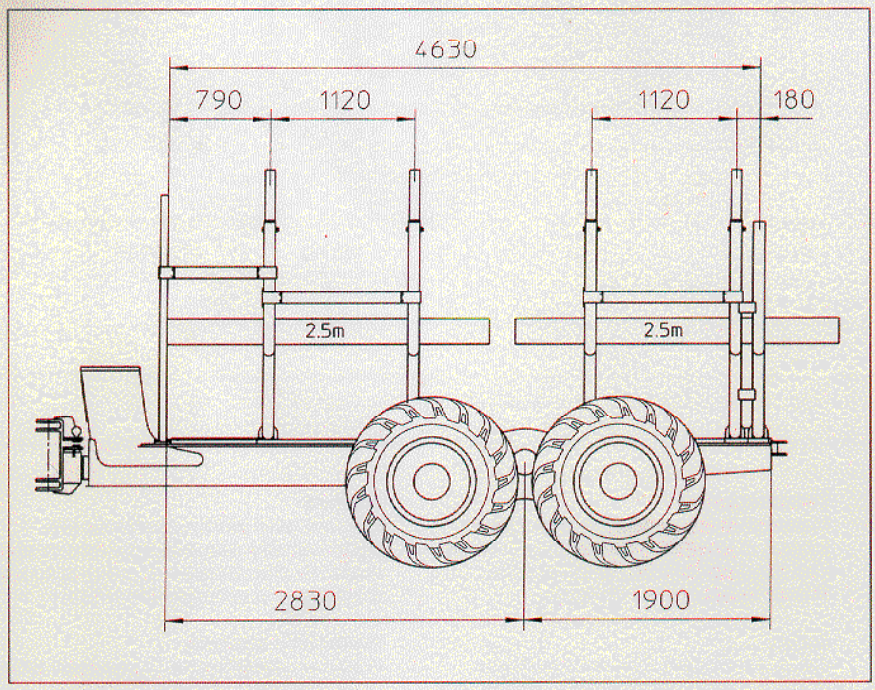

Cab
Spacious, light and comfortable cab gives the operator excellent visibility in all directions. Efficient heating and air-conditioning. Noise level ISO 5131: 1993 below 72 dB(A). Safety tested according to ISO standards. Radio/ cassette recorder. Connetion for cellular phone. Tinted polycarbonate windows.

Standard equipment
Tools. Operators' Manual. Spare Parts Catalogue. Fire extinguisher (if not Fire Extinguishing System.) Lock-up transmission. Stability brake. Engine oil extraction pump.

Optional equipment
Exhaust catalytic converter. Exhaust brake. Engine and cab preheater. Air cushioned seat. Electrical refill pump for hydraulics. Vacuum pump for hydraulics. Extra fire extinguisher. Fire Extinguishing System, night automatic. Tracks. Chains. Biodegradeable hydraulic oil. Steering wheel. Hydraulically moveable headboard.

All rights to alterations reserved.

Timberjack Europe
P.O. Box 474
FIN-33101 Tampere, Finland
Telephone int. +358 31 241 0111
Telefax int. +358 31 241 0290

Timberjack