1070E IT4
1170E IT4

JOHN DEERE

RELIABLE AND DURABLE harvesters deliver:

- Powerful engine, less emissions
- JDLink™ remote machine management
- Processing Power Control
- Ergonomic work environment

Boost your productivity

John Deere 1070E and 1170E EPA Interim Tier 4 (IT4)/EU Stage III B Harvesters have been built for reduced emissions and good fuel economy, enhanced ergonomics, and greater machine and boom controls.

4

Highlights

Cutting-edge innovations in harvester technology

6

Engine

Designed for high power, torque and reduced emissions

8

Boom and harvester head

Durability improvements and intelligent control

10

Cabin

Enhanced ergonomics for more productivity and comfort

12

Machine intelligence

See the big picture and get bigger results

Highlights

ENGINE

- Meets IT4/Stage III B emission regulations without Diesel Exhaust Fluid (DEF, urea, AdBlue)
- Power and torque with reduced emissions

CONTROL SYSTEM

- TimberMatic™ H-12 with saw-sequence control and configurable user interface in the new powerful PC, HPC14.
- Triple CAN bus for improved reliability and ease of troubleshooting

BOOM

- More durable slew-rack bars and slew housing in the CH6 Boom
- Strengthened slew cylinders in CH6 and 180S Booms

From small details to total solution

A great harvester is more than the sum of its parts — it's the result of innovative details and engineering expertise. But what makes a John Deere harvester even greater is that it's backed by the total solution commitment. Besides a great piece of equipment, you also receive our comprehensive after-sales service, including professional maintenance and user-training support.

HARVESTER HEAD

- New 4-wd H413 harvester head
- Reliable wiring harnesses with sealed connectors
- New feed-motor seals for longer motor wear life

POWERTRAIN

- Reinforced frame brake
- More transmission power and improved maneuverability in difficult terrain

HYDRAULICS

- Larger pump for better fuel economy and productivity
- Processing Power Control for intelligent use of hydraulics

MORE INFORMATION ONLINE:

Scan with your phone or go to www.johndeere.co.uk/Forestry

POWER AND TORQUE, less emissions

John Deere PowerTech™ engines provide the right technology, right now. Simple to operate and maintain while delivering power, fuel efficiency, reliability, and low cost of ownership, our latest IT4/Stage III B technology is backed by a comprehensive worldwide network of Deere dealer service locations.

The John Deere 1070E and 1170E IT4 Harvesters are equipped with bigger work pumps – 1070E IT4 with 160 cm^3 and 1170E IT4 with 175 cm^3 – for more power and torque.

Built-in high performance in every detail:
e.g. the new efficient alternator.

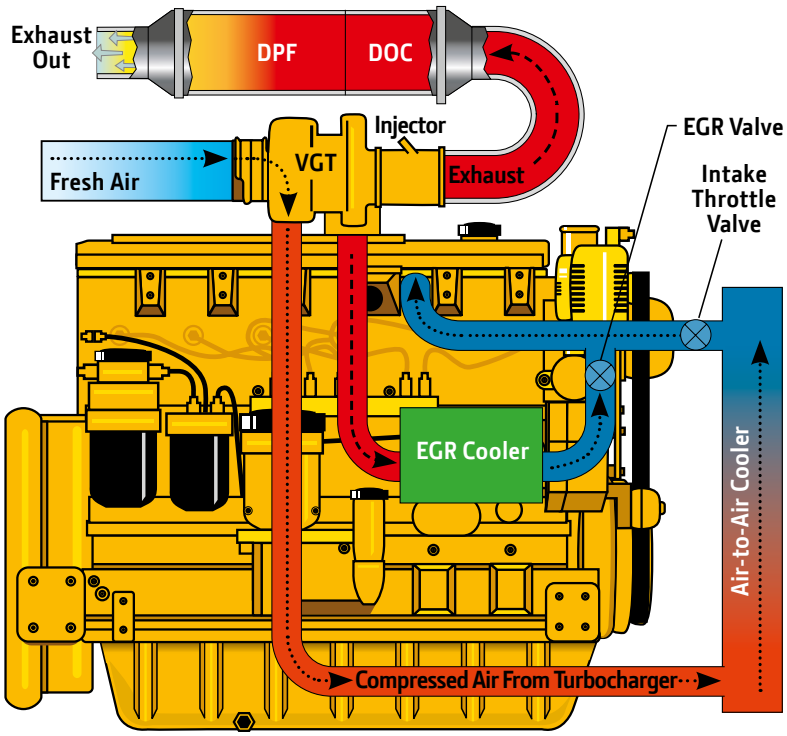

John Deere PowerTech engine features

- EPA IT4/EU Stage III B certified
- Cooler package with greater radiator-cooling capacity and reversing hydraulic fan
- Turbocharged (Variable Geometry Turbo, VGT); charge air cooled
- PowerCore™ air filter
- Larger Exhaust Gas Recirculation (EGR) cooler and valve
- Exhaust gas After-Treatment Device (Diesel Particle Filter, DPF and Diesel Oxidation Catalyst, DOC) for reduced emissions.

Deere IT4-platform engines meet IT4/Stage III B emission regulations without DEF (Diesel Exhaust Fluid, urea, AdBlue), based on proven EGR and ATD. To put it simply, IT4 engines provide power and torque with less emission. You will also benefit from numerous other features including reduced daily maintenance costs.

Increase productivity – not emissions

BOOM AND HARVESTER HEAD

In terms of durability, precise handling, and speedy processing, John Deere booms and harvester heads are world class. The new Processing Power Control (PPC) feature enables three different levels of machine performance to optimize fuel economy and maximize productivity in any logging condition. The operator just needs to press a single button to adjust the setting.

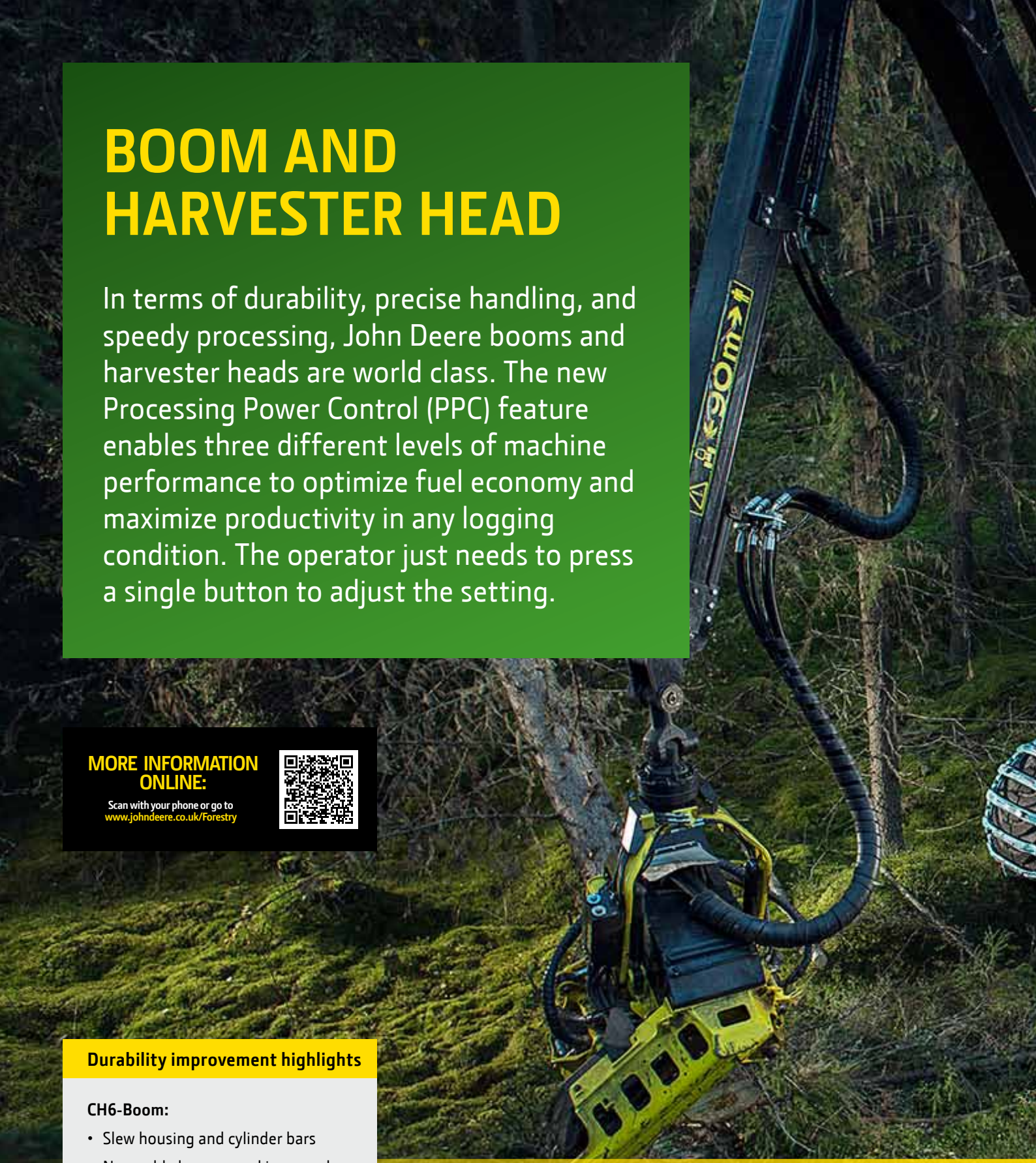

MORE INFORMATION ONLINE:

Scan with your phone or go to www.johndeere.co.uk/Forestry

Durability improvement highlights

CH6-Boom:

- Slew housing and cylinder bars
- New cable harness and improved routing

Harvester heads:

- New 4-wd H413 harvester head
- New cable harnesses with sealed connectors (all heads)
- New Poclain feed-motor design (H414)
- New Parker feed-motor seals (H754 and H414)

John Deere 1070E IT4 and 1170E IT4 Harvesters can be customized with different boom reaches and harvester heads to match a variety of logging applications. For even faster and more productive pulp and energy-wood harvesting, harvester heads can be equipped with optional Multi-Tree Handling (MTH) devices.

Intuitive boom and head control at the tip of your finger

The E-series cabin – **IMPROVED ERGONOMICS, SUPERIOR VISIBILITY**

The cabin in John Deere 1070E and 1170E IT4 Harvesters is all about productivity, safety, and comfort for a combination of ergonomics and smooth control. The cabin rotates 160 degrees following the boom, for safe and efficient boom and harvester-head operation. Equipped with powerful work lights with the option of LED or halogen sets, the cabin also contains an air-suspended seat, ergonomic manual-control dashboard-mounted panels, and an automated climate-control system.

Cabin-Rotating Angle

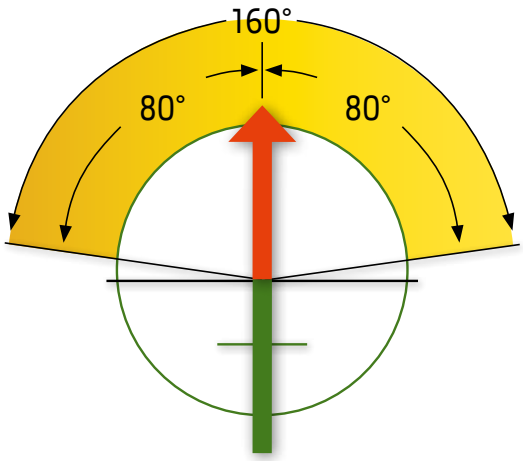

Cabin features

- 160-deg. rotating cabin
- Boom follow-through
- Outstanding visibility
- Powerful work lights with LED or halogen options
- Ergonomic dashboard
- Low noise and vibration levels

The cabin has undergone several improvements to take ergonomics, comfort, and productivity even further. There is more foot- and legroom, including easy access to keyboard and printer. New General Packet Radio Service (GPRS), Global Positioning System (GPS), and preheater remote control antennas have been relocated to improve data transfer. The new top-of-roof Falling Objects Protection System (FOPS) guard better protects work lights and aids visibility to treetops.

Ergonomics and efficiency

All creature comforts, from easy and accurate operation to convenient cooler storage, have been considered.

THE LATEST SOFTWARE FOR THE BEST RESULTS

1070E IT4 and 1170E IT4 Harvesters are loaded with John Deere-exclusive automation features for enhanced productivity and uptime.

TimberMatic H-12 is a state-of-the-art machine-control system with an easy-to-use and -configure user interface that integrates base machine control, the measuring system, and bucking. TimberMatic H-12 offers top-class merchandizing and measuring accuracy.

TimberLink H is a machine performance- and condition-optimization tool that keeps equipment owners and managers on track with detailed information on machine hours, processing productivity, fuel consumption, and more.

With the JDLink™ remote machine-monitoring system, several machines can be monitored and reports transmitted simultaneously in real time to the office computer system via the Internet. Data including machine hours, location, curfew, geographic fencing, and trouble codes is delivered, and remote engine-software updates are enabled without a call to the dealer or a trip to the field by a service technician.

The TimberLink Overview display provides a visual analysis of overall machine performance.

The new PC, HPC14 meets the most demanding requirements of the forest industry.

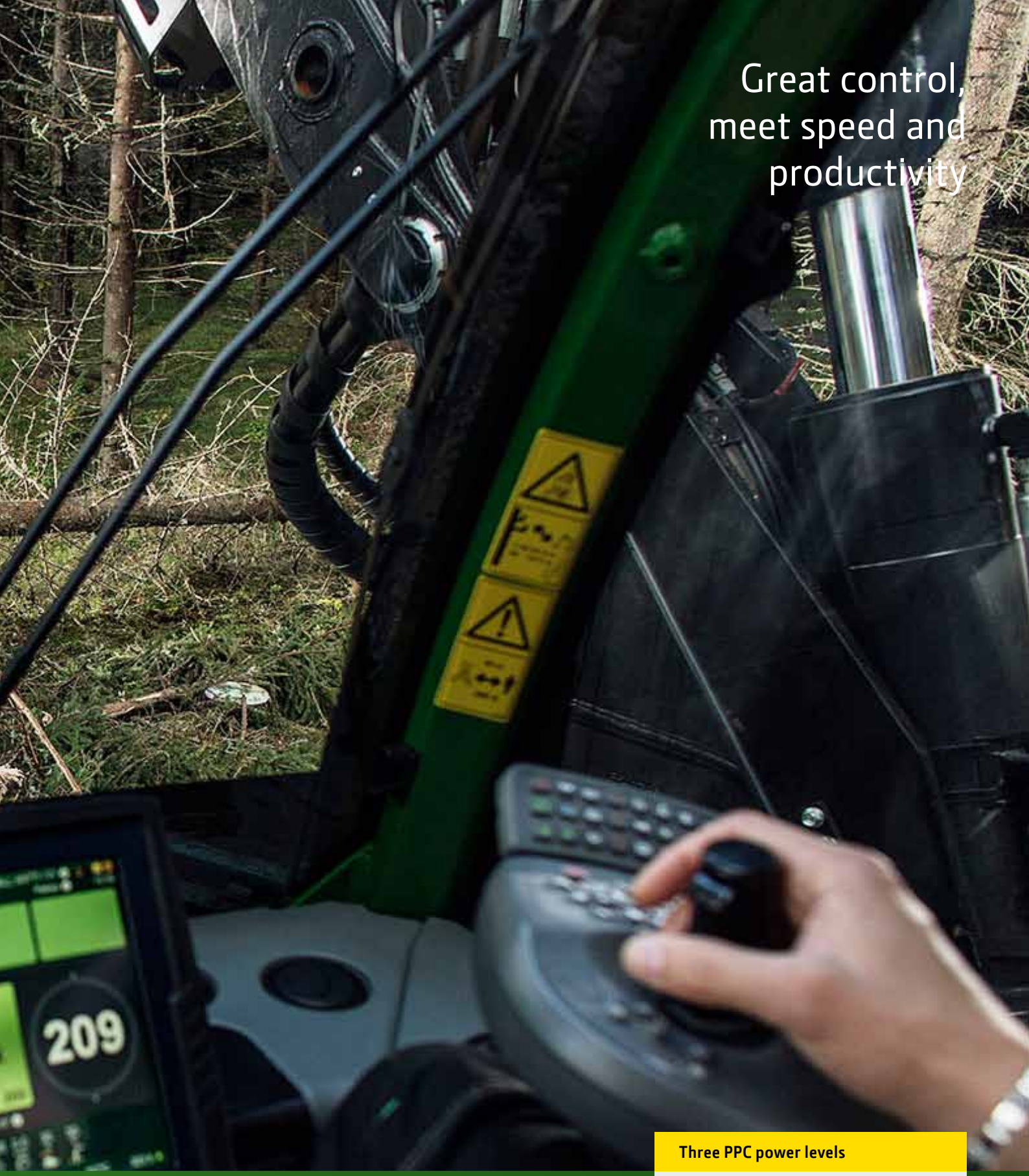

Great control, meet speed and productivity

Processing Power Control optimizes processing power and fuel economy in a variety of logging conditions. Just select the desired level, and the software takes care of the rest. The TimberLink report shows the results on your display.

Three PPC power levels

- Level 1: small-diameter tree handling for thinning
- Level 2: nominal tree sizes
- Level 3: thick and heavy stems

1070E IT4 / 1170E IT4 technical data

	1070E IT4	1170E IT4
DIESEL ENGINE	John Deere 6068 PowerTech™ Plus turbocharged, charge air cooled, 6 cylinders, 6.8 l-displacement	John Deere 6068 PowerTech Plus turbocharged, charge air cooled, 6 cylinders, 6.8 l-displacement
Maximum Power	136 kW @ 1,900 rpm / 182 SAE hp	145 kW @ 1,900 rpm / 194 SAE hp
Torque	850 Nm @ 1,400 rpm	935 Nm @ 1,400 rpm
Fuel Tank Capacity	300 l	300 l
TRANSMISSION	Hydrostatic-mechanical, 2-speed gearbox	Hydrostatic-mechanical, 2-speed gearbox
Tractive Force	130 kN	150 kN
Travel Speed, Gear 1	0–7,5 km	0–7,5 km
Travel Speed, Gear 2	0–24 km	0–24 km
STEERING	Proportional frame steering with mini levers	Proportional frame steering with mini levers
Turning Angle	±44 deg.	±44 deg.
BRAKES	Service and work brakes are hydraulically actuated, oil-immersed, multi-disc brakes. The parking and emergency brakes are spring actuated. The frame oscillation brake is automated.	
AXLES/BOGIES	Hydromechanical differential lock at the front and rear	
Front Axle	Balanced bogie axles; rigid axle (1070E 4W)	
Rear Axle	Rigid axle	
ELECTRIC SYSTEM		
Voltage	24 V	24 V
Batteries	2x145 Ah	2x145 Ah
Alternator	150 A / 28 V	150 A / 28 V
Lights	Halogen: 10 work lights, 4 boom lights, and 6 thinning lights; LED lights optional	Halogen: 10 work lights, 4 boom lights, and 6 thinning lights; LED lights optional
HYDRAULICS	Load sensing, power adjustable	Load sensing, power adjustable
Pump Capacity	160 cm^3	175 cm^3
Operating Pressure	24/28 MPa	24/28 MPa
Hydraulic Tank	170 l	170 l
BOOM	180S	CH6
Maximum Reach Lengths	8.6/10/10.8 m	10/11.3 m
Gross Lifting Torque	143 kNm	165 kNm
Slewing Torque	38 kNm	45 kNm
Slewing Angle	220 deg.	220 deg.
Tilt Angle, Forward/Back	+28 / –14 deg.	+28 / –14 deg.
CABIN	Leveling and rotating, or fixed cabin	Leveling and rotating, or fixed cabin
Rotating Angle	160 deg.	160 deg.
Sideways Tilt	17 deg.	17 deg.
Forward and Backward Tilt	10 deg.	10 deg.
MEASURING AND CONTROL SYSTEM	PC / Windows-based TimberMatic H-12	PC / Windows-based TimberMatic H-12
HARVESTER HEADS	H752HD, H754, H412, H413 and H414	H752HD, H754, H412, H413 and H414

*Please note: Measurements are guidelines only and may vary depending on production tolerances. The manufacturer reserves the right to make changes.
All product names featured in this brochure are registered trademarks of John Deere Forestry Oy.

MEASUREMENTS*	1070E IT4 4 wheel	1070E IT4 6 wheel	1170E IT4
Length [A]	6435 mm	6920 mm	7180 mm
Front Axle – Middle Joint [B]	1850 mm	1850 mm	1950 mm
Rear Axle – Middle Joint [C]	1850 mm	1850 mm	1850 mm
Wheelbase [B+C]	3700 mm	3700 mm	3800 mm
Tires, Front	34–14 / 26,5–12 (20)	22,5–16	24,5–20
Tires, Rear	34–14 / 26,5–12 (20)	34–14 / 26,5–12 (20)	34–14
Width – 600-Series Tires [D]	2600 mm	2660 mm	—
Width – 650-Series Tires [D]	2710 mm	—	2720 mm
Width – 710-Series Tires [D]	—	2820 mm	2820 mm
Outer Turning Radius – 650-Series Tires	5860 mm	—	—
Outer Turning Radius – 710-Series Tires	—	6020 mm	6150 mm
Inner Turning Radius – 650-Series Tires	3080 mm	—	—
Inner Turning Radius – 710-Series Tires	—	3250 mm	3330 mm
Transport Height	3640–3740 mm	3675 mm	3720 mm
Ground Clearance, Middle Joint [E]	560–640 mm	575 mm	625 mm
Minimum Machine Weight [with harvester head model]	15 050 kg [H412]	15 750 kg [H412]	17 800 kg [H754]

*Please note: Measurements are guidelines only and may vary depending on production tolerances.

Examples of Standard Equipment*

Leveling and rotating cabin
TimberMatic™ H-12 control system
Processing Power Control (PPC)
TimberLink™ overview window
JDLink™ remote machine-monitoring system
Hydraulic reversing cooling fan
Air-suspension seat
Halogen lights
Balanced bogie

*Available in specific countries; see your dealer for details.

Examples of Optional Equipment*

Fixed cabin
GPS device and software
TimberLink software license
Configurable User Interface TimberMatic™ H-12
Printer
Rearview camera
LED lights
Preheater for the engine and cabin
Electric fuel-refill pump
Electric hydraulics-refill pump
Biodegradeable hydraulic oil
Hydraulic vacuum pump
Automatic fire-extinguishing system
Tool kits
Tracks and chains
Hydraulic system-bypass filter
Stump treatment device

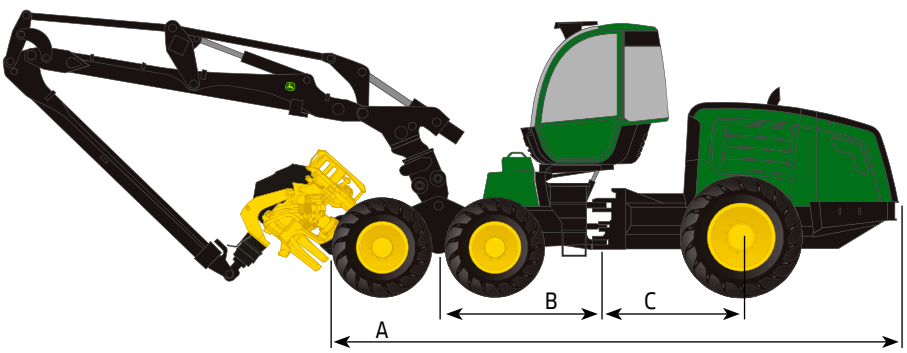

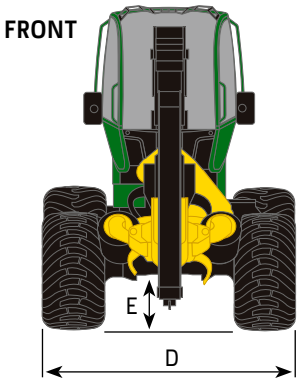

This brochure/literature has been compiled with care for worldwide circulation. While general information, pictures, and descriptions are provided, some illustrations and text may include options and accessories not available in all regions. Please contact your local dealer for details. John Deere reserves the right to change specification and design for products described in this brochure without notice. No liability for errors and omissions.

The leading provider of advanced harvesting solutions and services

Our ambition is to offer innovative solutions to make your work more productive, efficient, and easy. We are dedicated to being a long-term partner for our customers. Our wide distribution network offers professional support and services to customers worldwide.

Nothing Runs Like a Deere.

JOHN DEERE

This brochure has been compiled for worldwide circulation. While general information, pictures, and descriptions are provided, some illustrations and text may include options and accessories not available in all regions. For more information, please contact your local John Deere dealer. John Deere reserves the right to change specification and design for products in this brochure without notification. John Deere is not liable for any possible errors or omissions in this brochure.

Printed in Finland, Offset Ulonen 06-2014

www.JohnDeere.com