Timberjack

1270B

Harvester

TECHNICAL SPECIFICATIONS

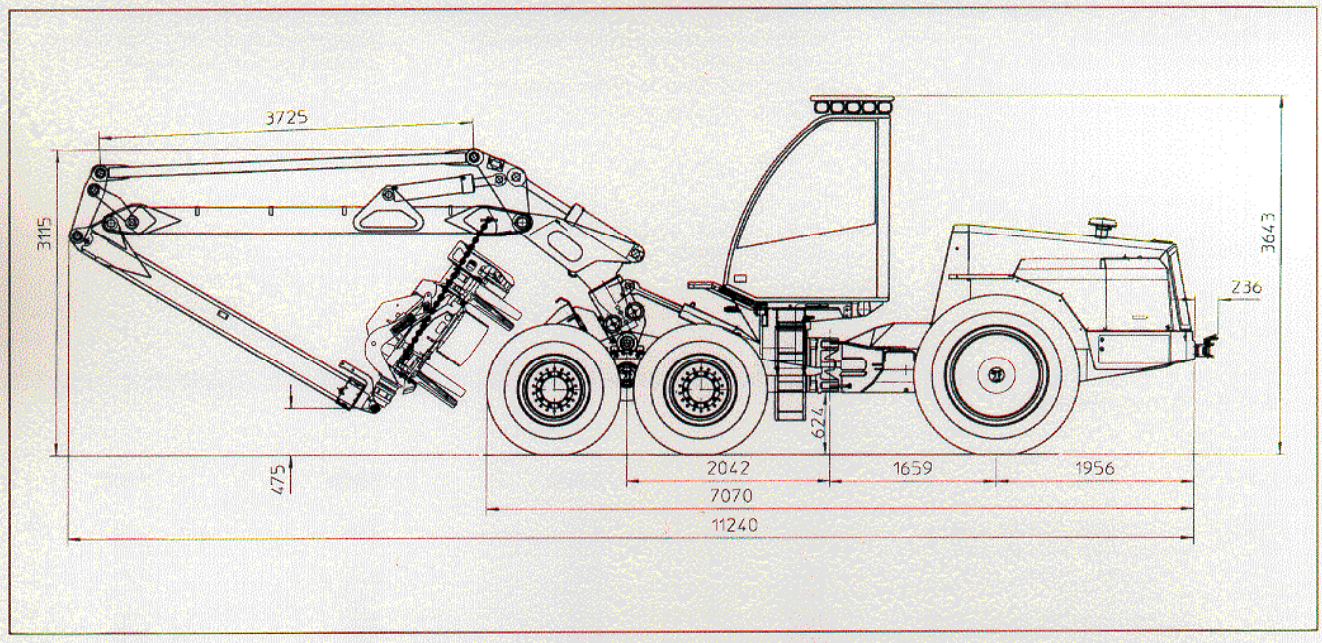

Dimensions
Length, chassis 7 070 mm
Width; 600-series tires 2 680 mm
alt. 2860 mm
Width; 700-series tires 2 860 mm
Height 3 650 mm
Ground clearance 624 mm
Weight depending on equipment, min. 15 900 kg

Engine
Perkins 1306-8T1 turbocharged 6-cylinder diesel engine
Displacement 7,6 l
Max power 152 kW/1 800 rpm
Max torque 847 Nm/1 600 rpm
Fuel tank 465 l

Transmission
Hydrostatic-mechanical power transmission, two-speed gear box
Travel speed 0-25 km/h
Max tractive force 148 kN

Axles
Bogie axle with portal type bogie beams. Power transmission through gears in bogie beams. Hydraulically operated mechanical diff. lock front and rear.

Hydraulic system
Load-sensing, pressure relieved constant pressure system
Pump capacity 250 l/1 800 rpm
Working pressure 24 MPa

Timberjack TMC-system
(Total Machine Control)
Controls engine, transmission and crane. Driver specific parameters for 7 operators and two factory settings.

Electrical system
Voltage 24V, batteries 2 x 135 Ah
Alternator 28 V, 140 A
Working lights; 16 lamps (2 x 70 W) Twin power
More than 30 lux in working area

Steering
Articulated frame steering with two hydraulic cylinders. Proportional steering with electrical joystick and/or orbitrol steering wheel.

Brakes
Service and working brakes are hydraulically actuated, oil immersed multiple disc brakes. Spring actuated parking and emergency brakes in front and rear axle placed between diff. and bogie/wheel.

Tires
Front 600 x 26.5
Rear 600 x 34
Options, front 700 x 26.5
rear 700 x 34

Cab
Spacious, well-lit and comfortable cab offers excellent visibility in all directions.
Efficient heating and air conditioning. Safety tested according to ISO standards (ROPS, FOPS, OPS and BC). Noise level meets ISO standards. Radio/cassette recorder. Connection for cellular phone. Light green polycarbonate windows.

Crane
L 200 parallel motion knuckle boom
Max reach with head 8.6 m and 10.3 m
Gross lifting torque 168 kNm
Gross slewing torque 43.6 kNm
Slewing angle 195°
Tilt angle -15° +30°

Measuring system

Timberjack 3000 measuring and control system:

- Easy to use, information is displayed on a large screen with clear graphic symbols and text
- Highly automated harvester head control including automatic saw bar control, automatic pressure adjustment of the delimbing knives and automatic harvester head tilt-up
- Modular based CAN-bus reduces the amount of cabling needed, ensuring accuracy and reliability
- Compact and efficient design of the push buttons and joysticks, for good ergonomics
- Easy calibration of measuring length and diameter
- Printer for production reports, machine settings, log charts, etc.
- Fault finding function
- Memory card for transfering data, including production data and machine settings (PCM CIA-card).
- Comprehensive product support and operator training

Different levels of software programs depending on customer needs

- Control for colour marking and stump treatment
- Price and priority-based optimization
- Operation and service follow-up program
- Versatile data transfer options
- Option to use electronic calipers

The features above are available as part of various software packages. The Timberjack 3000 can include any or all of them depending on your specific needs.

Optional equipment

- Preheater for cabin, engine and hydr.tank
- Sun blinds
- Vacuum pump for hydraulics
- Tracks
- Chains
- Spare wheel

Note! Standard and optional equipment may vary. For details contact your local dealer.

Harvester heads

Timberjack offers a wide range of harvester heads for all harvesting operations from thinnings to regeneration harvesting and for various tree sizes.

Model:	**745**	**746C**	**755B**	**762C**
Max opening upper knives, mm	560	450	650	550
Max opening lower knives, mm	–	500	–	630
Max opening feed rollers, mm	560	500	650	606
Max width head, mm	1280	1380	1620	1818
Delimbing diameter tip to tip, mm	400	390	560	430
Max cutting diameter, mm	550	500	560	650
Weight incl rotator and link, kg	815	960	1050	1350
Feed force, kN	16,0/20,0*	20,9/26,3**	24,0***	23,4****
Chain speed, m/s	41	40	41	40
Pump capacity, l/min(recom.)	200-250	200-285	250	225-255
Operating pressure max, MPa	24	25	24	25
Saw bar, mm	640	640	750	750/800
Max reach with the L200 crane, m	10,3	10,3	10,3	8,6

* = With 400/500 cc motor
** = with 500/630 cc motor
*** = with 630 cc motor
****=with 780 cc motor

The manufacturer reserves the right to make changes or add improvements without incurring any obligation to make such changes on machines manufactured previously.

Timberjack Ab
P.O. BOX 502
S-195 25 Märsta, Sweden
Tel. +46 8 591 252 00
Fax +46 8 591 112 61

Timberjack

Timberjack Group • A Member of Rauma Corporation

®Timberjack is a registered trademark of Timberjack Inc.