STANDARD

WWW.HSP.SE

THE ORIGINAL

The twin cylinders* in the standard grapple provide low and even shaft loading, which means less wear. The design of the claws allows the logs to roll in gently, fills the grapple efficiently, and ensures that the load stays in place. This grapple works quickly and easily on all types of material.

- Twin cylinders*
- Twin boom tubes
- Expander pins
- Reliable and user friendly
- Extremely high quality
- Powder coated
- Made from high grade steel

GRAPPLE DIMENSIONS		015*	020*	025	028	035	040	050	055
Max Working Pressure	MPa	23	23	23	23	23	23	23	23
Tip force, tip to tip	kN	9,3	8,7	17	16,7	16,1	16,2	16	16,0
Opening time at 70l/min	s	0,4	0,4	0,8	0,9	1,0	1,1	1,5	1,7
Closing time at 70l/min	s	0,6	0,6	1,4	1,5	1,6	1,7	2,1	2,5
Length, Closed grapple	mm	740	780	800	830	885	970	1080	1110
Maximum grapple opening	mm	1170	1400	1450	1690	1880	2070	2110	2390
Max width	mm	397	397	488	488	526	526	526	526
Width, outer claw	mm	355	355	434	434	472	472	472	472
Height, closed grapple	mm	510	510	540	530	565	610	615	695
Height, open grapple	mm	685	645	690	635	600	630	830	715
Min load diameter	mm	90	95	110	110	120	140	140	160
Load area	m^2	0,15	0,20	0,25	0,28	0,35	0,40	0,50	0,55
Max load	kg	2000	2000	3500	3500	5000	5000	5000	5000
Weight	kg	120	130	225	230	255	285	310	325

* Models 015 and 020 work with one cylinder.

We reserve the right to modify products and amend specifications without prior notice, with reservation for any printing errors.

HSP Gripen of Sweden

THE ORIGINAL.
IN 70 DIFFERENT WAYS.

DIMENSIONS

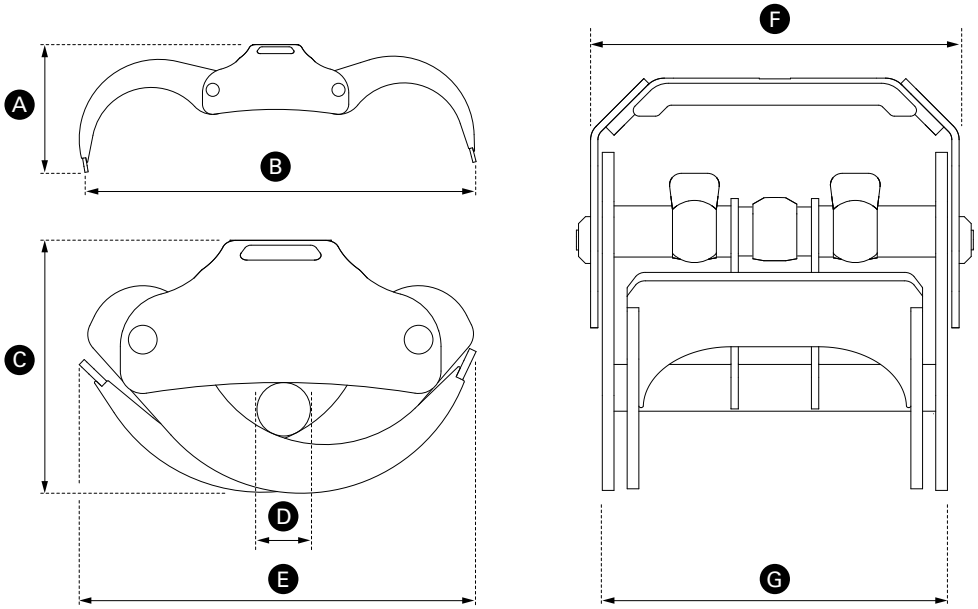

- A Height, open grapple
- B Maximum grapple opening
- C Height, closed grapple
- D Min load diameter
- E Length, Closed grapple
- F Max width
- G Width, outer claw

16-0045 album.se | English

ACCESSORIES

Do you want to upgrade your grapple, or just change a component? You can find the entire range of optional upper mountings, rotators and bucket halves.

Please visit www.hsp.se for a wider range of accessories.

SERVICE | DEALERS

All our products maintain the highest possible quality, which means that you will seldom need to use our service function. But if a fault or problem develops, our knowledgeable service personnel can help you at once. You can reach our customer service desk by phoning +46 652-366 90 or sending an e-mail to hsp@hsp.se

Your local dealer:

HASSELA SKOGSPRODUKTER
Åkerivägen 11, SE-820 78 Hassela, Sweden. Telefon +46 652 366 90. Fax +46 652 405 50. E-post hsp@hsp.se

HEAVYDUTY

WWW.HSP.SE

FOR TOUGH JOBS

Our most powerful grapple is designed for heavy lifting and tough jobs. This makes them particularly suitable for clear-cutting forwarders etc. The steel plates are thicker, the rotator plate is larger, the lower boom tubes are reinforced, which combine to make the Heavy Duty our stiffest grapple.

- Twin cylinders*
- Twin boom tubes
- Expander pins
- Reliable and user friendly
- Extremely high quality
- Powder coated
- Made from high grade steel

GRAPPLE DIMENSIONS		015*	020*	025	028	035	040	050	055
Max Working Pressure	MPa	23	23	23	23	23	23	23	23
Tip force, tip to tip	kN	9,3	8,7	17	16,7	16,1	16,2	16	16,0
Opening time at 70l/min	s	0,4	0,4	0,8	0,9	1,0	1,1	1,5	1,7
Closing time at 70l/min	s	0,6	0,6	1,4	1,5	1,6	1,7	2,1	2,5
Length, Closed grapple	mm	740	780	800	830	885	970	1080	1110
Maximum grapple opening	mm	1170	1400	1450	1690	1880	2070	2110	2390
Max width	mm	397	397	488	488	526	526	526	526
Width, outer claw	mm	355	355	434	434	472	472	472	472
Height, closed grapple	mm	510	510	540	530	565	610	615	695
Height, open grapple	mm	685	645	690	635	600	630	830	715
Min load diameter	mm	90	95	110	110	120	140	140	160
Load area	m^2	0,15	0,20	0,25	0,28	0,35	0,40	0,5	0,55
Max load	kg	2000	2000	3500	3500	5000	5000	5000	5000
Weight	kg	150	160	250	260	285	320	340	365

* Models 015 and 020 work with one cylinder.

We reserve the right to modify products and amend specifications without prior notice, with reservation for any printing errors.

Gripen of Sweden

THE ORIGINAL.
IN 70 DIFFERENT WAYS.

DIMENSIONS

16-0045 album.se | English

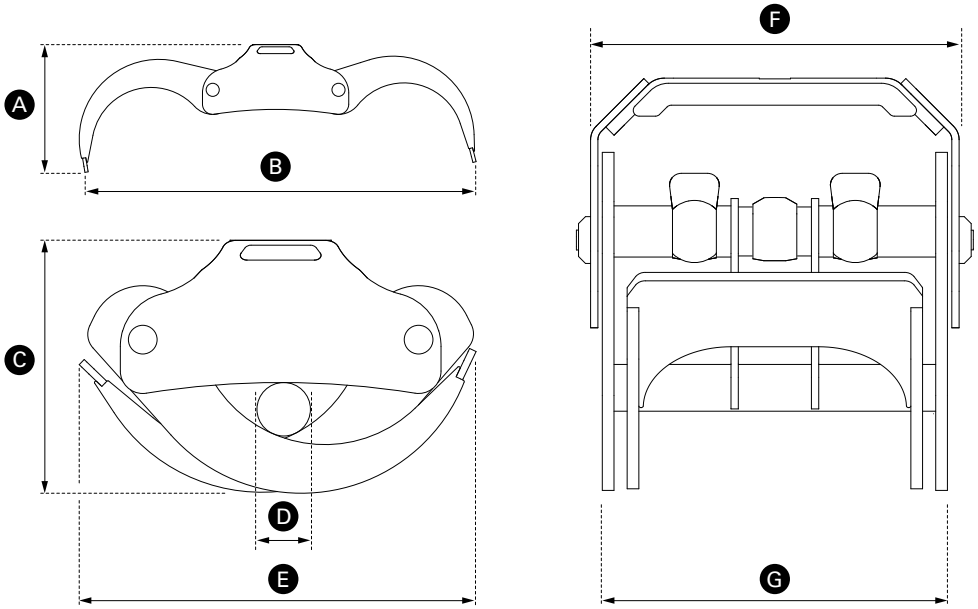

- A Height, open grapple
- B Maximum grapple opening
- C Height, closed grapple
- D Min load diameter
- E Length, Closed grapple
- F Max width
- G Width, outer claw

ACCESSORIES

Do you want to upgrade your grapple, or just change a component? You can find the entire range of optional upper mountings, rotators and bucket halves.

Please visit www.hsp.se for a wider range of accessories.

SERVICE | DEALERS

All our products maintain the highest possible quality, which means that you will seldom need to use our service function. But if a fault or problem develops, our knowledgeable service personnel can help you at once. You can reach our customer service desk by phoning +46 652-366 90 or sending an e-mail to hsp@hsp.se

Your local dealer:

HASSELA SKOGSPRODUKTER
Åkerivägen 11, SE-820 78 Hassela, Sweden. Telefon +46 652 366 90. Fax +46 652 405 50. E-post hsp@hsp.se

BIO

WWW.HSP.SE

MAXIMISE FOREST YIELD

The Bio model has been designed for quick, easy handling of slash and waste material, parts of trees and other material that is to be chipped to BioFuel, either directly into chippers during felling, or later from a stock-pile. The Bio model uses reinforced boom tubes and twice the material thickness in the claws. The Bio also has mechanical end stops, which prevents the cylinders from bottoming. There is also a widened Bio model for stump handling etc.

- Twin cylinders*
- Twin boom tubes
- Expander pins
- Reliable and user friendly
- Extremely high quality
- Powder coated
- Made from high grade steel

GRAPPLE DIMENSIONS		015*	020*	025	028	035	040	055	080	100
Max Working Pressure	MPa	23	23	23	23	23	23	23	25	25
Tip force, tip to tip	kN	9,3	8,7	17	16,7	16,1	16,2	16,0	35	39
Opening time at 70l/min	s	0,4	0,4	0,8	0,9	1,0	1,1	1,7	3,6	4,2
Closing time at 70l/min	s	0,6	0,6	1,4	1,5	1,6	1,7	2,5	5,2	6,0
Length, Closed grapple	mm	740	780	800	830	885	970	1110	1355	1490
Maximum grapple opening	mm	1170	1400	1450	1690	1880	2070	2390	2840	3015
Max width	mm	397	397	488	488	526	526	526	800	800
Width, outer claw	mm	355	355	434	434	472	472	472	714	714
Height, closed grapple	mm	510	510	540	530	565	610	695	835	950
Height, open grapple	mm	685	645	690	635	600	630	715	890	1100
Min load diameter	mm	90	95	110	110	120	140	160	175	225
Load area	m^2	0,15	0,20	0,25	0,28	0,35	0,40	0,55	0,80	1,0
Max load	kg	2000	2000	3500	3500	5000	5000	5000	6500	7500
Weight	kg	135	145	235	240	265	295	335	790	920

* Types 015 and 020 work with one cylinder.

We reserve the right to modify products and amend specifications without prior notice, with reservation for any printing errors.

Gripen of Sweden

THE ORIGINAL.
IN 70 DIFFERENT WAYS.

DIMENSIONS

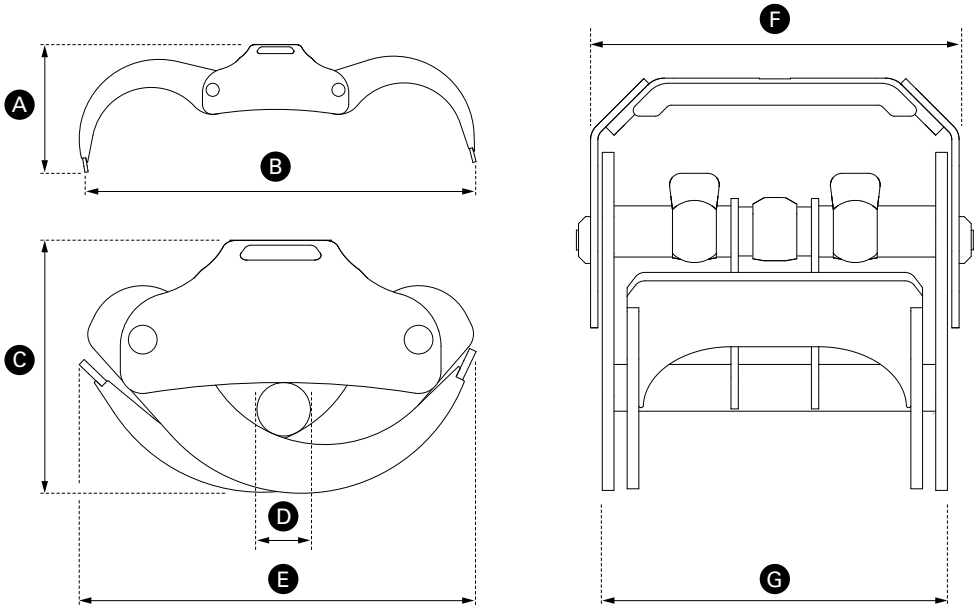

- A Height, open grapple
- B Maximum grapple opening
- C Height, closed grapple
- D Min load diameter
- E Length, Closed grapple
- F Max width
- G Width, outer claw

16-0045 album.se | English

ACCESSORIES

Do you want to upgrade your grapple, or just change a component? You can find the entire range of optional upper mountings, rotators and bucket halves.

Please visit www.hsp.se for a wider range of accessories.

SERVICE | DEALERS

All our products maintain the highest possible quality, which means that you will seldom need to use our service function. But if a fault or problem develops, our knowledgeable service personnel can help you at once. You can reach our customer service desk by phoning +46 652-366 90 or sending an e-mail to hsp@hsp.se

Your local dealer:

HASSELA SKOGSPRODUKTER
Åkerivägen 11, SE-820 78 Hassela, Sweden. Telefon +46 652 366 90. Fax +46 652 405 50. E-post hsp@hsp.se

TERMINAL

WWW.HSP.SE

EFFICIENT TIMBER HANDLING

Our terminal grapple is designed to handle large of volumes of wood at sawmills, timber terminals, harbour facilities etc. Its stable and robust design makes it both reliable and user friendly. The Terminal closes tip to tip, and it has twin chains that keep the timber in place even when the grapple does not have a full load.

- Stable and robust design
- Reliable and user friendly
- Excellent timber handling
- Extremely high quality
- Made from high grade steel

GRAPPLE DIMENSIONS		150	175	200	225	250	300	325	350
Max Working Pressure	MPa	25	25	25	25	25	35	35	35
Tip force, tip to tip	kN	43	44	43	39	37	35	37	36
Opening time at 70l/min*	s	5,4	5,4	5,4	5,4	5,4	2,4	2,4	2,4
Closing time at 70l/min*	s	8	8	8	8	8	3,5	3,5	3,5
Length, Closed grapple	mm	2060	2200	2275	2460	2425	2710	2835	2920
Maximum grapple opening	mm	2890	2960	3130	3275	3680	4060	4190	4285
Max width	mm	3125	3240	3295	3700	3830	1080	1080	1080
Width, outer claw	mm	950	950	950	950	950	950	950	950
Height, closed grapple	mm	2245	2315	2330	2405	2610	2655	2775	2840
Height, open grapple	mm	1225	1330	1210	1100	1290	1585	1800	1800
Min load diameter	mm	1140	1140	1230	1230	1510	1510	2150	2255
Load area	m^2	1,5	1,7	2,0	2,2	2,5	3.0	3,25	3,5
Max load	kg	7000	7500	8500	10000	10000	12000	12000	12000
Weight	kg	1780	1820	1880	1920	1980	2200	2465	2560

* Model 300-350 are presented with 100l/min

We reserve the right to modify products and amend specifications without prior notice, with reservation for any printing errors.

Gripen of Sweden

THE ORIGINAL.
IN 70 DIFFERENT WAYS.

DIMENSIONS

16-0045 album.se | English

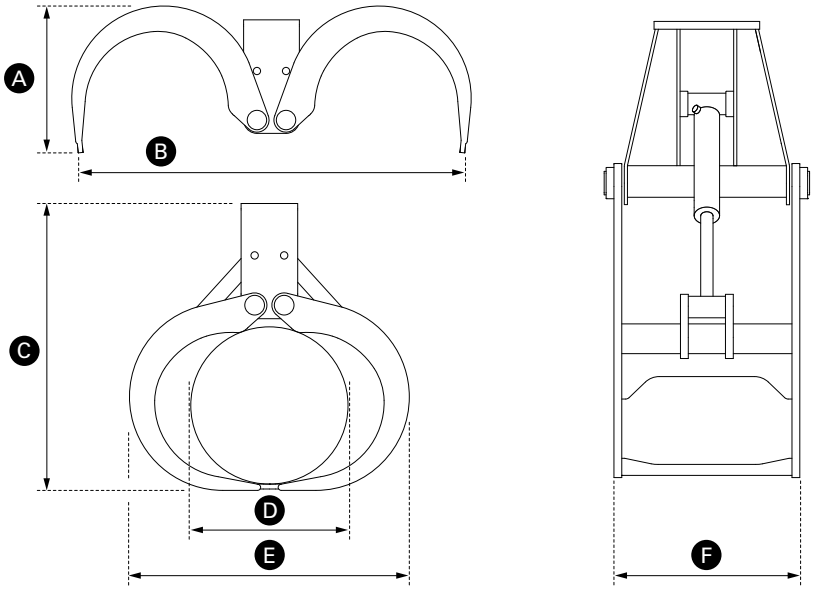

- A Height, open grapple
- B Maximum grapple opening
- C Height, closed grapple
- D Min load diameter
- E Length, Closed grapple
- F Width, outer claw

ACCESSORIES

Do you want to upgrade your grapple, or just change a component? You can find the entire range of optional upper mountings, rotators and bucket halves.

Please visit www.hsp.se for a wider range of accessories.

SERVICE | DEALERS

All our products maintain the highest possible quality, which means that you will seldom need to use our service function. But if a fault or problem develops, our knowledgeable service personnel can help you at once. You can reach our customer service desk by phoning +46 652-366 90 or sending an e-mail to hsp@hsp.se

Your local dealer:

HASSELA SKOGSPRODUKTER
Åkerivägen 11, SE-820 78 Hassela, Sweden. Telefon +46 652 366 90. Fax +46 652 405 50. E-post hsp@hsp.se

TERMINAL LB

WWW.HSP.SE

FOR HEAVY LIFTING

Terminal LB (LowBuilt) grapple is similar to the normal terminal grapple and has the same excellent handling. It has been designed for efficient loading of large volumes of goods. The Terminal LB is basically a large HeavyDuty. i.e. a large grapple with overlapping claws. We offer two different types of grapple, Terminal and Terminal LB, to do the same job. Choose the one that suits you best.

- Stable and robust design
- Expander pins
- Reliable and user friendly
- Excellent timber handling
- Extremely high quality
- Powder coated
- Made from high grade steel

GRAPPLE DIMENSIONS		080	100	125	150	175	225
Max Working Pressure	MPa	25	25	25	25	25	25
Tip force, tip to tip	kN	35	39	40	41	41	41
Opening time at 70l/min	s	3,6	4,2	5	5	5,5	6
Closing time at 70l/min	s	5,2	6,0	5,5	5,5	6	6,5
Length, Closed grapple	mm	1355	1490	1620	1730	1900	2170
Maximum grapple opening	mm	2840	3015	3400	3600	3800	4445
Max width	mm	800	800	1080	1130	1130	1130
Width, outer claw	mm	714	714	990	1010	1010	1010
Height, closed grapple	mm	835	950	1060	1110	1200	1350
Height, open grapple	mm	890	1100	1300	1260	1500	1700
Min load diameter	mm	175	225	240	280	290	300
Load area	m^2	0,80	1,0	1,25	1,5	1,75	2,25
Max load	kg	6500	7500	7500	7500	8500	8500
Weight	kg	800	930	1400	1650	1850	2100

We reserve the right to modify products and amend specifications without prior notice, with reservation for any printing errors.

Gripen of Sweden

THE ORIGINAL.
IN 70 DIFFERENT WAYS.

DIMENSIONS

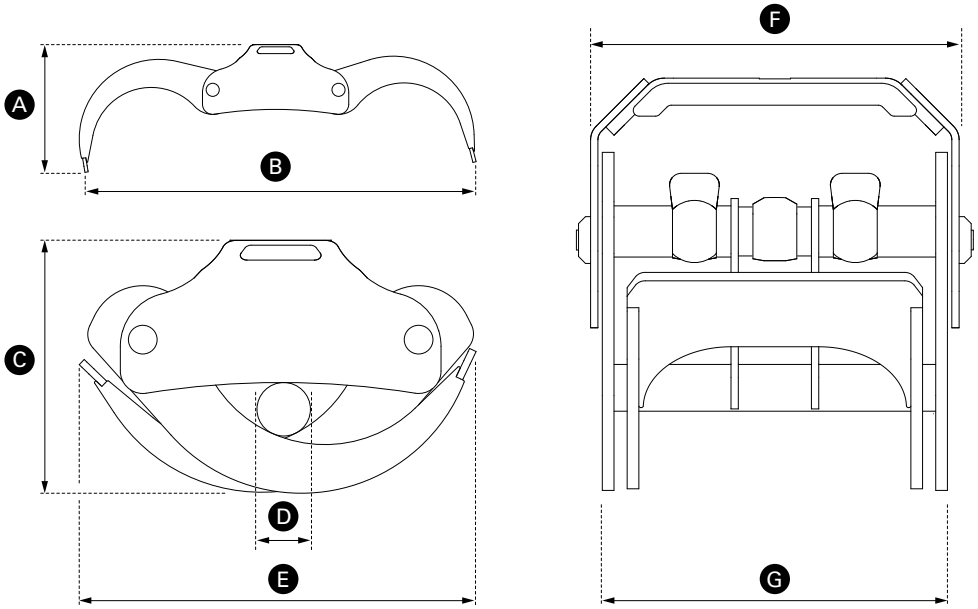

- A Height, open grapple
- B Maximum grapple opening
- C Height, closed grapple
- D Min load diameter
- E Length, Closed grapple
- F Max width
- G Width, outer claw

16-0045 album.se | English

ACCESSORIES

Do you want to upgrade your grapple, or just change a component? You can find the entire range of optional upper mountings, rotators and bucket halves.

Please visit www.hsp.se for a wider range of accessories.

SERVICE | DEALERS

All our products maintain the highest possible quality, which means that you will seldom need to use our service function. But if a fault or problem develops, our knowledgeable service personnel can help you at once. You can reach our customer service desk by phoning +46 652-366 90 or sending an e-mail to hsp@hsp.se

Your local dealer:

HASSELA SKOGSPRODUKTER
Åkerivägen 11, SE-820 78 Hassela, Sweden. Telefon +46 652 366 90. Fax +46 652 405 50. E-post hsp@hsp.se

CONSTRUCTION

WWW.HSP.SE

WIDEST OPENING

The Construction is our premium grapple, which probably opens wider than any other grapple. It is designed to be mounted on an excavator, and has a unique stand that uses heavier plate, bent in one piece, and no welded side pieces. The load retention valve* and piston accumulator* are installed inside the stand, integrated with the hydraulic system. Construction can do heavy lifting, and is extremely stable at the same time.

- Stable and robust design
- Integrated load retention valve*
- Integrated piston accumulator*
- Complete with excavator mounting**
- Powder coated
- Made from high grade steel

GRAPPLE DIMENSIONS		015*	025	040	055	080
Max Working Pressure	MPa	25	25	25	25	25
Tip force, tip to tip	kN	10	18	17	17	46
Opening time at 70l/min	s	0,4	0,8	1,1	1,7	3,6
Closing time at 70l/min	s	0,6	1,4	1,7	2,5	5,2
Length, Closed grapple	mm	740	800	965	1100	1355
Maximum grapple opening	mm	1170	1460	2075	2390	2840
Max width	mm	397	510	550	550	800
Width, outer claw	mm	355	434	472	472	714
Height, closed grapple	mm	510	560	635	685	885
Height, open grapple	mm	685	725	655	725	940
Min load diameter	mm	90	100	150	180	175
Load area	m^2	0,15	0,25	0,40	0,55	0,8
Max load	kg	3000	5000	7000	7000	10000
Weight	kg	165	290	340	380	830

We reserve the right to modify products and amend specifications without prior notice, with reservation for any printing errors.

* The 015 model operates with one cylinder, and has either an accumulator or load retention valve as standard. ** Individually replaceable, available for most mountings.

Gripen of Sweden

THE ORIGINAL.
IN 70 DIFFERENT WAYS.

DIMENSIONS

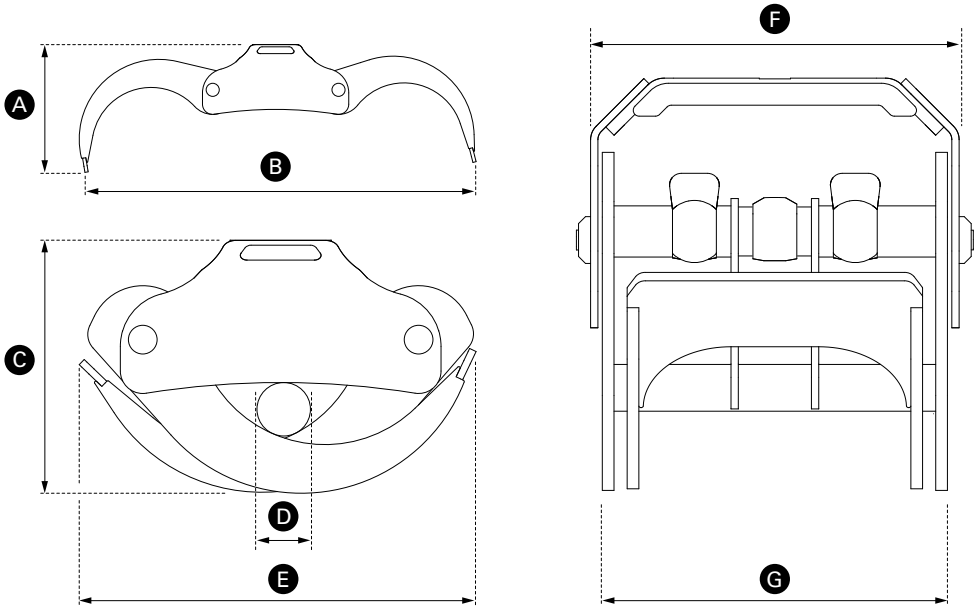

- A Height, open grapple
- B Maximum grapple opening
- C Height, closed grapple
- D Min load diameter
- E Length, Closed grapple
- F Max width
- G Width, outer claw

16-0045 album.se | English

ACCESSORIES

Do you want to upgrade your grapple, or just change a component? You can find the entire range of optional upper mountings, rotators and bucket halves.

Please visit www.hsp.se for a wider range of accessories.

SERVICE | DEALERS

All our products maintain the highest possible quality, which means that you will seldom need to use our service function. But if a fault or problem develops, our knowledgeable service personnel can help you at once. You can reach our customer service desk by phoning +46 652-366 90 or sending an e-mail to hsp@hsp.se

Your local dealer:

HASSELA SKOGSPRODUKTER
Åkerivägen 11, SE-820 78 Hassela, Sweden. Telefon +46 652 366 90. Fax +46 652 405 50. E-post hsp@hsp.se

INDUSTRY

WWW.HSP.SE

AS REQUESTED BY THE SAWMILLS

The Industry model has been specially designed for the sawmill industry, but can also be installed on other applications. Industry has three claws, for easy separation and grasping of single logs. Industry features low profile design, it is wider and thus more stable, without compromising ease of operation.

- Excellent function
- Expander pins
- Reliable and user friendly
- Extremely high quality
- Powder coated
- Made from high grade steel

GRAPPLE DIMENSIONS		015*
Max Working Pressure	MPa	23
Tip force, tip to tip	kN	9,3
Opening time at 70l/min	s	0,4
Closing time at 70l/min	s	0,6
Length, Closed grapple	mm	740
Maximum grapple opening	mm	1210
Max width	mm	397
Width, outer claw	mm	310
Height, closed grapple	mm	510
Height, open grapple	mm	690
Min load diameter	mm	100
Load area	m^2	0,15
Max load	kg	3500
Weight	kg	175

* Types 015 work with one cylinder.

We reserve the right to modify products and amend specifications without prior notice, with reservation for any printing errors.

Gripen of Sweden

THE ORIGINAL.
IN 70 DIFFERENT WAYS.

DIMENSIONS

16-0045 album.se | English

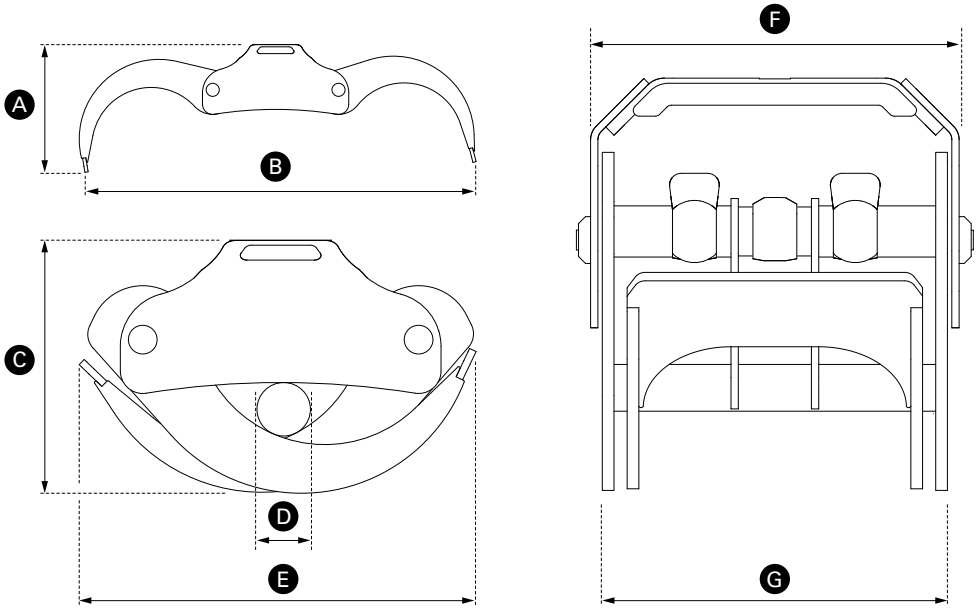

- A Height, open grapple
- B Maximum grapple opening
- C Height, closed grapple
- D Min load diameter
- E Length, Closed grapple
- F Max width
- G Width, outer claw

ACCESSORIES

Do you want to upgrade your grapple, or just change a component? You can find the entire range of optional upper mountings, rotators and bucket halves.

Please visit www.hsp.se for a wider range of accessories.

SERVICE | DEALERS

All our products maintain the highest possible quality, which means that you will seldom need to use our service function. But if a fault or problem develops, our knowledgeable service personnel can help you at once. You can reach our customer service desk by phoning +46 652-366 90 or sending an e-mail to hsp@hsp.se

Your local dealer:

HASSELA SKOGSPRODUKTER
Åkerivägen 11, SE-820 78 Hassela, Sweden. Telefon +46 652 366 90. Fax +46 652 405 50. E-post hsp@hsp.se

V-SHAPE

WWW.HSP.SE

THE EASY WAY TO SORT TIMBER

The V-Shape is similar to our standard grapple, and has been specially designed to make fine sorting easier. Ground contact is minimised, using a V-Shape. Since the tip of the claw is centred, force distribution is not affected and the risk of uneven loading is eliminated in practice.

- Twin cylinders*
- Twin boom tubes
- Expander pins
- Reliable and user friendly
- Extremely high quality
- Made from high grade steel

GRAPPLE DIMENSIONS		025	028	035	040	050	055
Max Working Pressure	MPa	23	23	23	23	23	23
Tip force, tip to tip	kN	17	16,7	16,1	16,2	16	16
Opening time at 70l/min	s	0,8	0,9	1,0	1,1	1,5	1,7
Closing time at 70l/min	s	1,4	1,5	1,6	1,7	2,1	2,5
Length, Closed grapple	mm	800	830	885	970	1080	1110
Maximum grapple opening	mm	1450	1690	1880	2070	2110	2390
Max width	mm	488	488	526	526	526	526
Width, outer claw	mm	434	434	472	472	472	472
Height, closed grapple	mm	540	530	565	610	615	695
Height, open grapple	mm	690	635	600	630	830	715
Min load diameter	mm	110	110	120	140	140	160
Load area	m^2	0,25	0,28	0,35	0,40	0,50	0,55
Max load	kg	3500	3500	5000	5000	5000	5000
Weight	kg	230	235	260	290	315	330

We reserve the right to modify products and amend specifications without prior notice, with reservation for any printing errors.

Gripen of Sweden

THE ORIGINAL.
IN 70 DIFFERENT WAYS.

DIMENSIONS

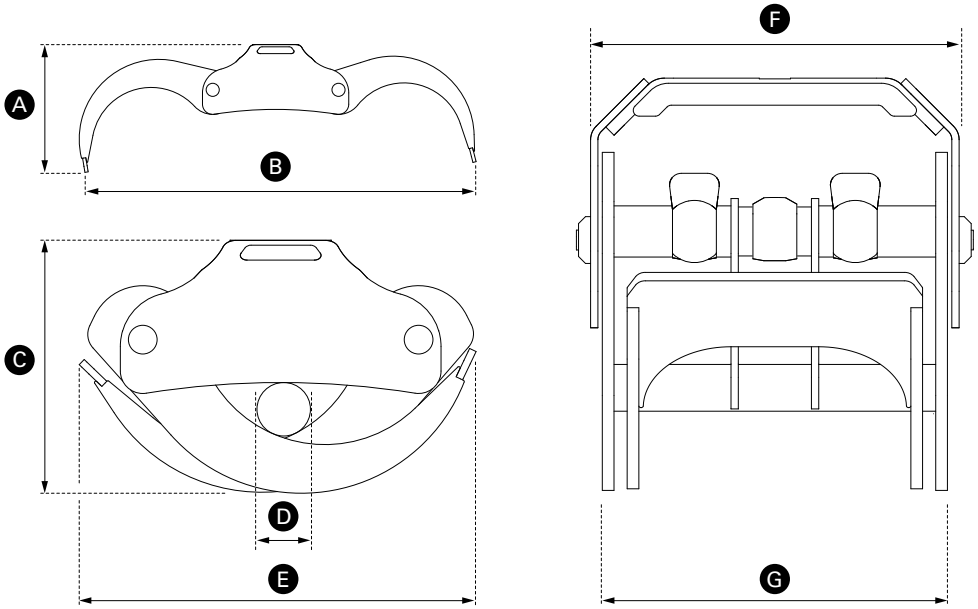

- A Height, open grapple
- B Maximum grapple opening
- C Height, closed grapple
- D Min load diameter
- E Length, Closed grapple
- F Max width
- G Width, outer claw

16-0045 album.se | English

ACCESSORIES

Do you want to upgrade your grapple, or just change a component? You can find the entire range of optional upper mountings, rotators and bucket halves.

Please visit www.hsp.se for a wider range of accessories.

SERVICE | DEALERS

All our products maintain the highest possible quality, which means that you will seldom need to use our service function. But if a fault or problem develops, our knowledgeable service personnel can help you at once. You can reach our customer service desk by phoning +46 652-366 90 or sending an e-mail to hsp@hsp.se

Your local dealer:

HASSELA SKOGSPRODUKTER
Åkerivägen 11, SE-820 78 Hassela, Sweden. Telefon +46 652 366 90. Fax +46 652 405 50. E-post hsp@hsp.se

SORTING

WWW.HSP.SE

QUICK, EASY LIFTING OF STONES AND SCRAP

The Sorting grapple is particularly suitable for use in building and construction sites as well as recycling facilities. It's equipped with a load retention valve and piston accumulator that are fitted inside the stand, integrated with the hydraulic system. Sorting can manage heavy lifting and is extremely stable at the same time. Unlike Construction, this grapple closes tip to tip.

- Stable and robust design
- Integrated load retention valve
- Integrated piston accumulator
- Complete with excavator mounting*
- Powder coated
- Made from high-grade steel

GRAPPLE DIMENSIONS		015*	025	040	055	080
Max Working Pressure	MPa	25	25	25	25	25
Tip force, tip to tip	kN	9	18	17	17	46
Opening time at 70l/min	s	0,4	0,5	0,8	0,9	2,2
Closing time at 70l/min	s	0,7	0,8	1,4	1,6	3,5
Length, Closed grapple	mm	710	770	890	1010	1220
Maximum grapple opening	mm	1390	1500	2000	2330	2650
Max width	mm	440	510	550	550	800
Width, outer claw	mm	425	520	520	900	1200
Height, closed grapple	mm	705	790	880	970	1290
Height, open grapple	mm	530	525	420	480	940
Min load diameter	mm	360	510	590	650	670
Load area	m^2	0,12	0,17	0,23	0,27	0,46
Max load	kg	3000	5000	7000	7000	10000
Weight	kg	200	320	380	590	1100

* Individually replaceable, available for most mountings.

We reserve the right to modify products and amend specifications without prior notice, with reservation for any printing errors.

Gripen of Sweden

THE ORIGINAL.
IN 70 DIFFERENT WAYS.

DIMENSIONS

16-0045 album.se | English

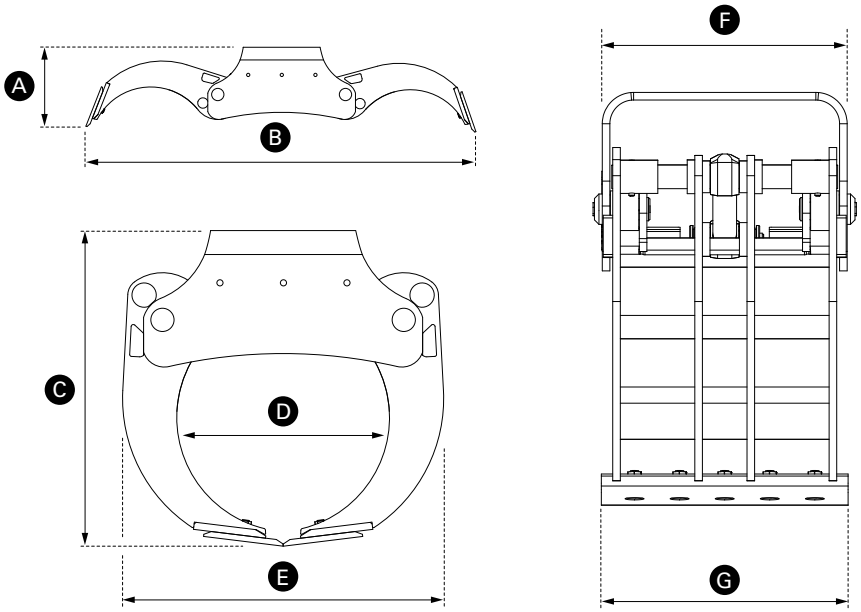

- A Height, open grapple
- B Maximum grapple opening
- C Height, closed grapple
- D Min load diameter
- E Length, Closed grapple
- F Max width
- G Width, outer claw

ACCESSORIES

Do you want to upgrade your grapple, or just change a component? You can find the entire range of optional upper mountings, rotators and bucket halves.

Please visit www.hsp.se for a wider range of accessories.

SERVICE | DEALERS

All our products maintain the highest possible quality, which means that you will seldom need to use our service function. But if a fault or problem develops, our knowledgeable service personnel can help you at once. You can reach our customer service desk by phoning +46 652-366 90 or sending an e-mail to hsp@hsp.se

Your local dealer:

HASSELA SKOGSPRODUKTER
Åkerivägen 11, SE-820 78 Hassela, Sweden. Telefon +46 652 366 90. Fax +46 652 405 50. E-post hsp@hsp.se

DUO

WWW.HSP.SE

TWO IN ONE

A Duo* saves you time and makes swapping between brushwood and timber claws easy. Function changes take less than 10 minutes and just a few simple steps. With a Duo you waste neither time nor oil. Jobs you needed two grapples for are now done by one.

- Patented function
- Fast and easy tool change
- Reliable
- Improved profitability
- Including Extra everything**

GRAPPLE DIMENSIONS		025	028	035	055
Max Working Pressure	MPa	23	23	23	23
Tip force, tip to tip	kN	17	16,7	16,1	16
Opening time at 70l/min	s	0,8	0,9	1,0	1,7
Closing time at 70l/min	s	1,4	1,5	1,6	2,5
Length, Closed grapple	mm	800	830	885	1110
Maximum grapple opening	mm	1450	1690	1880	2390
Max width	mm	488	488	526	526
Width, outer claw	mm	486	486	486	486
Height, closed grapple	mm	540	530	565	695
Height, open grapple	mm	690	635	600	715
Min load diameter	mm	110	110	120	160
Load area	m^2	0,25	0,28	0,35	0,55
Max load	kg	3500	3500	5000	5000
Weight	kg	243/235	248/260	275/290	345/360

** Extra everything include twin hydraulic cylinders, impact cushioning, expander bolts, powder coating, quality steel, low shaft load and low design with a high degree of filling. * Duo is patented.

We reserve the right to modify products and amend specifications without prior notice, with reservation for any printing errors.

Gripen of Sweden

THE ORIGINAL.
IN 70 DIFFERENT WAYS.

DIMENSIONS

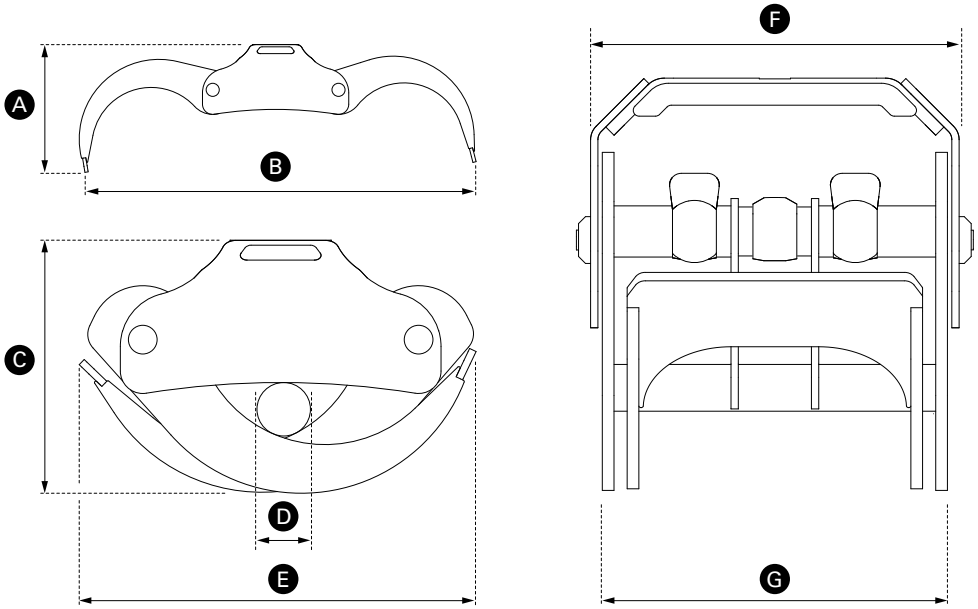

- A Height, open grapple
- B Maximum grapple opening
- C Height, closed grapple
- D Min load diameter
- E Length, Closed grapple
- F Max width
- G Width, outer claw

16-0045 album.se | English

ACCESSORIES

Do you want to upgrade your grapple, or just change a component? You can find the entire range of optional upper mountings, rotators and bucket halves.

Please visit www.hsp.se for a wider range of accessories.

SERVICE | DEALERS

All our products maintain the highest possible quality, which means that you will seldom need to use our service function. But if a fault or problem develops, our knowledgeable service personnel can help you at once. You can reach our customer service desk by phoning +46 652-366 90 or sending an e-mail to hsp@hsp.se

Your local dealer:

HASSELA SKOGSPRODUKTER
Åkerivägen 11, SE-820 78 Hassela, Sweden. Telefon +46 652 366 90. Fax +46 652 405 50. E-post hsp@hsp.se

MINI

WWW.HSP.SE

SMALL BUT POWERFUL

Light-weight, small, flexible grapples adapted to minor machinery, timber trailers, piece goods cranes and small excavators. Operated via just one cylinder, the Minis' geometry is the same as in our time-tested and successful larger grapple versions.

- Powered via one cylinder
- Light-weight and supple
- Expander bolts
- Extremely high quality
- Powder coated
- Made from high-grade steel

MODEL		STANDARD		HEAVYDUTY		BIO*		INDUSTRY
GRAPPLE DIMENSIONS		015	020	015	020	015	020	015
Max Working Pressure	MPa	23	23	23	23	23	23	23
Tip force, tip to tip	kN	9,3	8,7	9,3	8,7	9,3	8,7	9,3
Opening time at 70l/min	s	0,4	0,4	0,4	0,4	0,4	0,4	0,4
Closing time at 70l/min	s	0,6	0,6	0,6	0,6	0,6	0,6	0,6
Length, Closed grapple	mm	740	780	740	780	740	780	740
Maximum grapple opening	mm	1170	1400	1170	1400	1170	1400	1210
Max width	mm	397	397	397	397	397	397	397
Width, outer claw	mm	355	355	355	355	355	355	310
Height, closed grapple	mm	510	510	510	510	510	510	510
Height, open grapple	mm	685	645	685	645	685	645	690
Min load diameter	mm	90	95	90	95	90	95	100
Load area	m^2	0,15	0,20	0,15	0,20	0,15	0,20	0,15
Max load	kg	2000	2000	2000	2000	2000	2000	3500
Weight	kg	120	130	150	160	135	145	175

* HD The BIO Mini is also available in reinforced, heavy-duty design.

We reserve the right to modify products and amend specifications without prior notice, with reservation for any printing errors.

Gripen of Sweden

THE ORIGINAL.
IN 70 DIFFERENT WAYS.

DIMENSIONS

16-0045 album.se | English

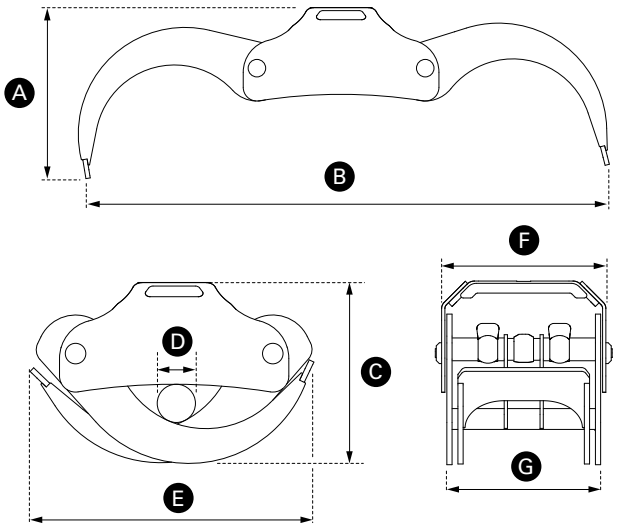

- A Height, open grapple
- B Maximum grapple opening
- C Height, closed grapple
- D Min load diameter
- E Length, Closed grapple
- F Max width
- G Width, outer claw

ACCESSORIES

Do you want to upgrade your grapple, or just change a component? You can find the entire range of optional upper mountings, rotators and bucket halves.

Please visit www.hsp.se for a wider range of accessories.

SERVICE | DEALERS

All our products maintain the highest possible quality, which means that you will seldom need to use our service function. But if a fault or problem develops, our knowledgeable service personnel can help you at once. You can reach our customer service desk by phoning +46 652-366 90 or sending an e-mail to hsp@hsp.se

Your local dealer:

HASSELA SKOGSPRODUKTER
Åkerivägen 11, SE-820 78 Hassela, Sweden. Telefon +46 652 366 90. Fax +46 652 405 50. E-post hsp@hsp.se

BUCKET HALVES

WWW.HSP.SE

FAST AND FLEXIBLE

Bucket halves for chip handling are available as accessories for Standard, HD, BIO and Construction grapples in 150-2500 litre sizes. These bucket halves are suitable for the 015-100 HSP Gripen and mean that you quickly switch from the timber grapple to the chip bucket and vice versa. Quick and easy. These buckets are also available in a narrower design for clearing out ditches and the like. You can switch over in less than 20 minutes. Saving both time and money for your business. Why make it more complicated?

- Quick change grapple/bucket
- Stable and robust design
- Extremely high quality
- Powder coated
- Made from high grade steel

BUCKET HALVES		150 l	300 l	350 l	500 l	1 000 l	1 500 l	2000 l	2 500 l
Height	mm	800	890	1000	890	1030	1120	1415	1590
Width	mm	850	970	1120	970	1140	1280	1670	1850
Length	mm	430	540	540	1000	1500	1500	1820	1820
Weight	kg	60	75	85	150	220	300	350	370

GRAPPLE SIZE	015	020	025	028	035	040	055	080	100
150 l	•	•	-	-	-	-	-	-	-
300 l	-	-	•	•	-	-	-	-	-
350 l	-	-	-	-	•	•	-	-	-
500 l	-	-	•	•	-	-	•	-	-
1000 l	-	-	-	-	•	•	-	-	-
1500 l	-	-	-	-	-	•	•	-	-
2000 l	-	-	-	-	-	-	-	•	-
2500 l	-	-	-	-	-	-	-	-	•

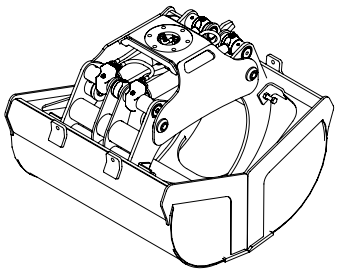

We reserve the right to modify products and amend specifications without prior notice, with reservation for any printing errors.

Gripen of Sweden

THE ORIGINAL.
IN 70 DIFFERENT WAYS.

DIMENSIONS

16-0045 album.se | English

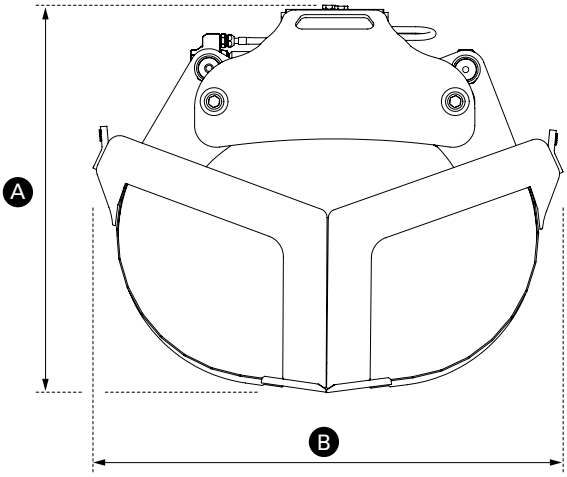

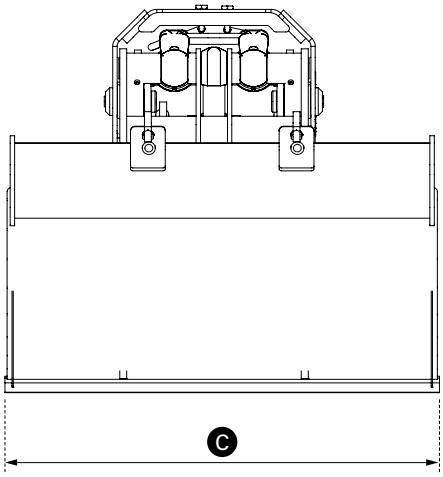

A Height
B Width
C Length

ACCESSORIES

Do you want to upgrade your grapple, or just change a component? You can find the entire range of optional upper mountings, rotators and bucket halves.

Please visit www.hsp.se for a wider range of accessories.

SERVICE | DEALERS

All our products maintain the highest possible quality, which means that you will seldom need to use our service function. But if a fault or problem develops, our knowledgeable service personnel can help you at once. You can reach our customer service desk by phoning +46 652-366 90 or sending an e-mail to hsp@hsp.se

Your local dealer:

HASSELA SKOGSPRODUKTER
Åkerivägen 11, SE-820 78 Hassela, Sweden. Telefon +46 652 366 90. Fax +46 652 405 50. E-post hsp@hsp.se

SOLID BUCKETS

WWW.HSP.SE

FOR CHIPS AND OTHER BULK MATERIALS

The new generation of chip buckets is based on our time-tested, successful grapple technology and comes in sizes from 0.15 to 1.5 m^3. The buckets have been specifically developed for chip handling and optimum function inside chip vans and on the ground. They can also be adapted to other bulk materials such as ballast and fillers.

- Optimum geometry
- Stable and robust design
- Extremely high quality
- Powder coated[1]
- Made from high-grade steel

BUCKET SIZES		150	300	500	1000	1500
Max Working Pressure	MPa	25	25	25	25	25
Tip force, tip to tip	kN	9	18	18	17	17
Opening time at 70l/min	s	0,3	0,5	0,5	0,8	0,9
Closing time at 70l/min	s	0,5	0,8	0,8	1,4	1,6
Height	mm	825	845	845	1000	1180
Width	mm	880	915	915	1200	1455
Length	mm	430	650	1000	1400	1600
Width, open	mm	1500	1500	1500	2230	2600
Height, open	mm	730	730	760	590	725
Volume	l	150	300	500	1000	1500
Max load	kg	2000	3500	3500	5000	5000
Weight	kg	190	330	360	500	620

We reserve the right to modify products and amend specifications without prior notice, with reservation for any printing errors.

Gripen of Sweden

THE ORIGINAL.
IN 70 DIFFERENT WAYS.

DIMENSIONS

16-0045 album.se | English

- A Height
- B Width
- C Length
- D Width, open
- E Height, open

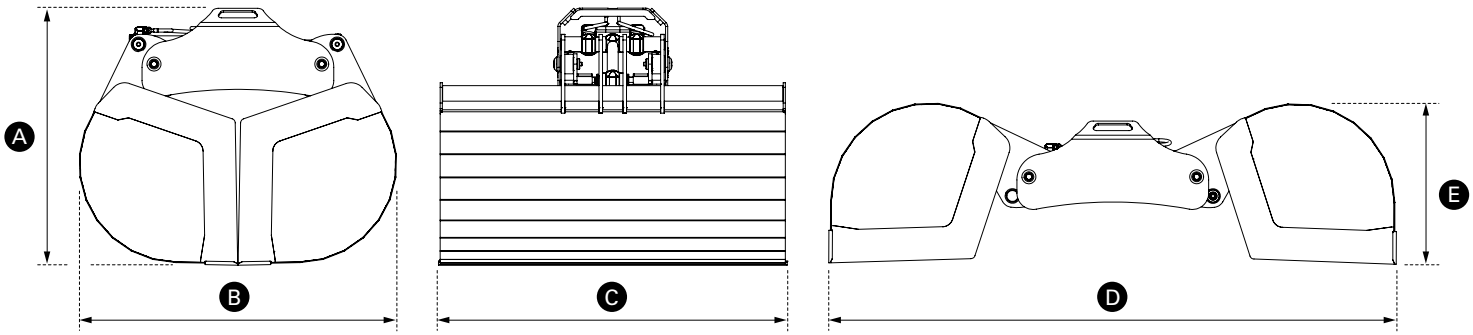

ACCESSORIES

Do you want to upgrade your grapple, or just change a component? You can find the entire range of optional upper mountings, rotators and bucket halves.

Please visit www.hsp.se for a wider range of accessories.

SERVICE | DEALERS

All our products maintain the highest possible quality, which means that you will seldom need to use our service function. But if a fault or problem develops, our knowledgeable service personnel can help you at once. You can reach our customer service desk by phoning +46 652-366 90 or sending an e-mail to hsp@hsp.se

Your local dealer:

HASSELA SKOGSPRODUKTER
Åkerivägen 11, SE-820 78 Hassela, Sweden. Telefon +46 652 366 90. Fax +46 652 405 50. E-post hsp@hsp.se

SAW CASSETTE

WWW.HSP.SE

FOR EXACT LENGTHS

Saw cassette for both excavator- and rotator mounting. Adapted for assembly on HSP Gripen 025, 028, 035, 040, 055 and 080 models.

SAW CASSETTE		X3M10	X3M19
Saw motor	cm^2	10	19
Width	mm	214	214
Length	mm	1040	1040
Height	mm	409	409
Min hydraulic pressure, motor	MPa	16	16
Max hydraulic pressure, motor	MPa	31	31
Min flow, motor	l/min	80	120
Max flow, motor	l/min	135	220
Saw bar	cm	75/82,5/90/100	75/82,5/90/100
Saw chain	inch	.404"	.404", ¾"
Automatic chain tension	automatic	Yes	Yes
Adjustable chain lubrication	adjustable	Yes	Yes
Automatic saw bar return	automatic	Yes	Yes
Max cutting diameter	cm	50/55/60	50/55/60
Oil tank capacity	litre	3,5	3,5
Weight, Saw cassette, attachment excl.	kg	120	120

- Automatic chain tension and saw bar return
- Adjustable chain lubrication
- Robust construction
- Extremely high quality
- Powder coated
- Manufactured in high grade steel
- Based on the same technology that JPS Harvester F2

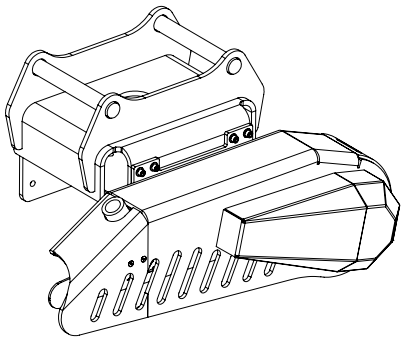

We reserve the right to modify products and amend specifications without prior notice, with reservation for any printing errors.

Gripen of Sweden

THE ORIGINAL.
IN 70 DIFFERENT WAYS.

DIMENSIONS

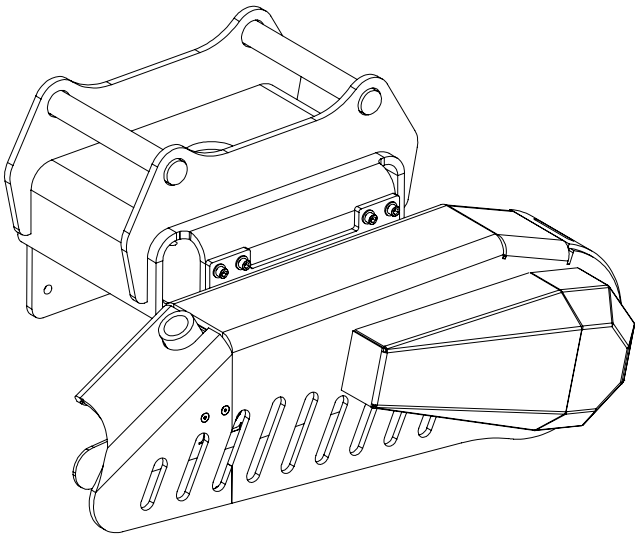

The saw cassette for both excavator- and rotator attachment is a smart accessory for example, length cutting, cutting bioenergy materials or tree parts. Also suitable on service vehicles such as multi-use backhoe loaders. This is possible by the brand new excavator attachment.

Ideal for cutting and clear cutting work in city environments or in association with storm damages. Individually adaptable for each grapple model or excavator attachment.

Adapted for assembly on HSP Gripen 025, 028, 035, 040, 055 and 080 models.

16-0045 album.se | English

ACCESSORIES

Do you want to upgrade your grapple, or just change a component? You can find the entire range of optional upper mountings, rotators and bucket halves.

Please visit www.hsp.se for a wider range of accessories.

SERVICE | DEALERS

All our products maintain the highest possible quality, which means that you will seldom need to use our service function. But if a fault or problem develops, our knowledgeable service personnel can help you at once. You can reach our customer service desk by phoning +46 652-366 90 or sending an e-mail to hsp@hsp.se

Your local dealer:

HASSELA SKOGSPRODUKTER
Åkerivägen 11, SE-820 78 Hassela, Sweden. Telefon +46 652 366 90. Fax +46 652 405 50. E-post hsp@hsp.se