JONSERED 1620Z

TECHNICAL INFORMATION

JONSERED 1620Z BASIC DATA

Technical data	J1620Z 80	J1620Z 93
Max. lifting capacity (kNm)	158	145
Hydraulic outreach* (m)	8	9,3
Hydraulic boom extension* (m)	1,7	2,9
Outreach - lifting capacity, standard (m - kg)	4.0 - 3450 5.0 - 3000 6.0 - 2650 7.0 - 2300 7.7 - 2080	4.0 - 3200 5.0 - 2750 6.0 - 2460 7.0 - 2100 8.0 -1820 9.0 -1480
Slewing system	Double	Double
Slewing angle (°)	412	412
Slewing torque, gross (kNm)	31	31
Max. slope viable at full capacity (°)	8	8
Max. working pressure (MPa)	22	22
Recommended oil flow – fixed pump (l/min), 1-pump	80	80
Recommended oil flow – fixed pump (l/min), 2-pump	2 x 80	2 x 80
Power needed at rec. oil flow (kW) - fixed pump, 1-pump	33	33
Power needed at rec. oil flow (kW) - fixed pump, 2-pump	65	65
Road height (mm)	2546	2546
Road width (mm)	2500	2500
Weight without grapple and stabilizer (kg)	2111	2242
Stabilizers, ET450+RM254 (kg)	533	
Stabilizers, SY550 (kg)	612	
Stabilizers, B5500+RM254 (kg)	625	

[1]) Weight with fixed pump system, oil weight included

Load diagram J1620Z80

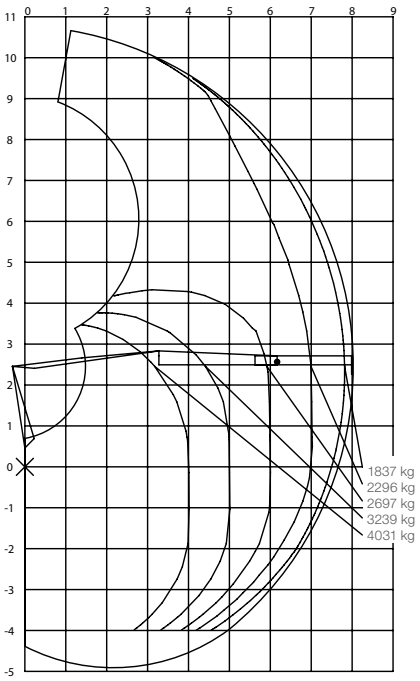

Load diagram J1620Z93

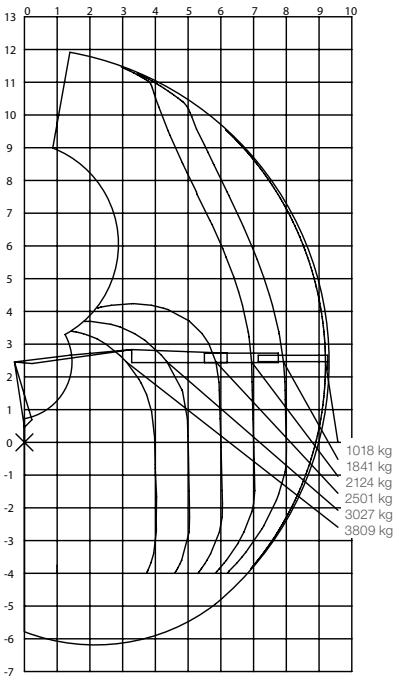

Crane with boom system type A

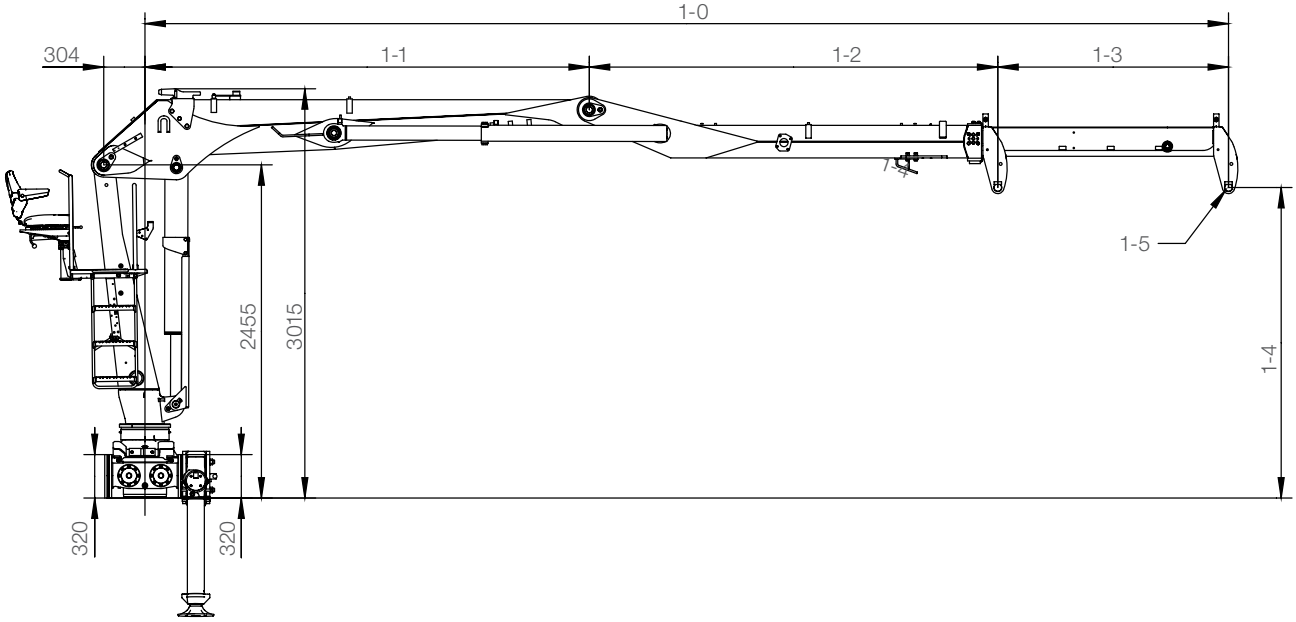

Close in

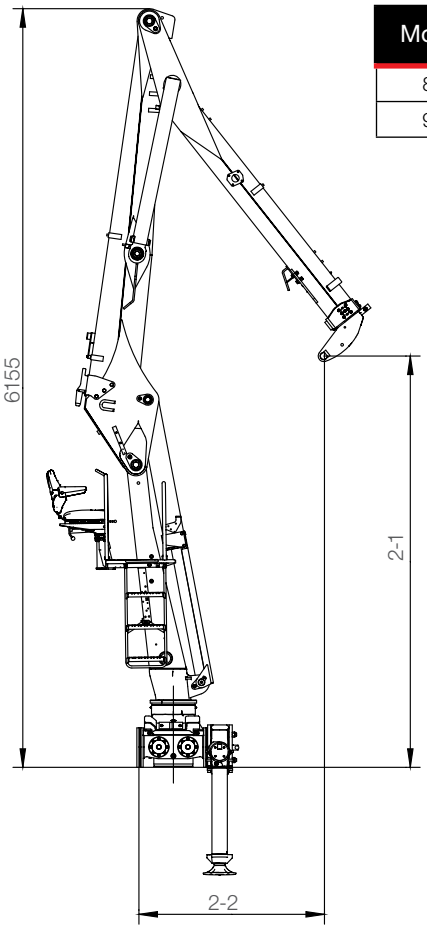

Model	1-0 min	1-0 max	1-1 max	1-2	1-3	1-4	1-5	HPL
80	6285	7985	3275	3010	1700	2288	Ø 40, B=184	X
93	6365	9265	3275	3090	2900	2242	Ø 40, B=184	X

Model	2.-1	2-2	HPL
80	3337	1505	X
93	3245	1233	X

Stabilizers ET450

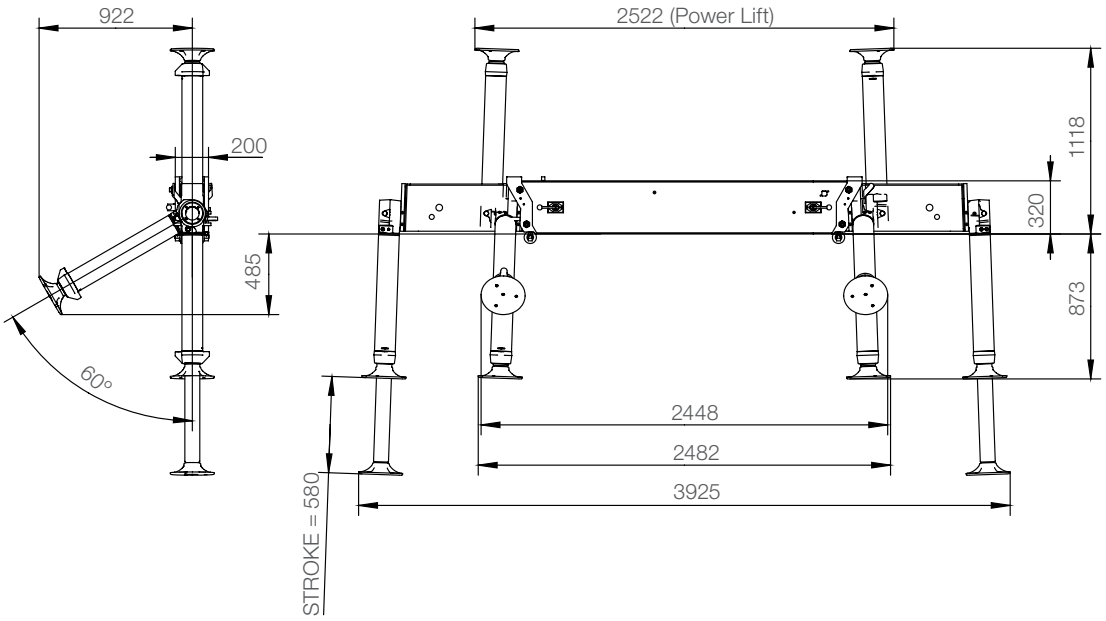

Stabilizers B5500

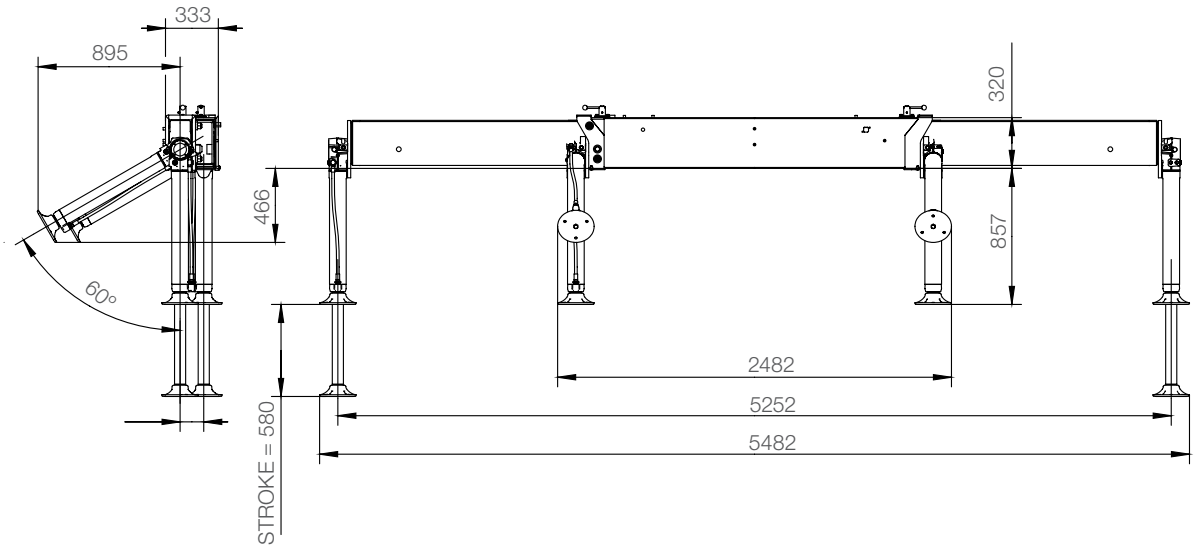

Stabilizers SY550

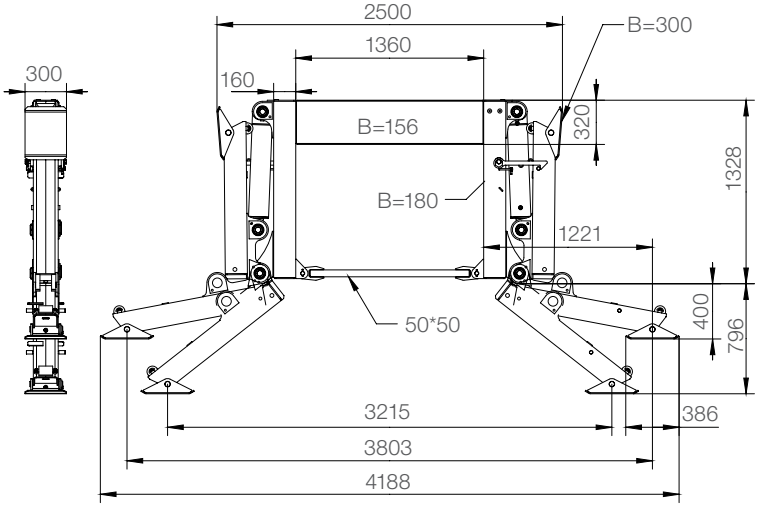

Base with stabilizers ET450

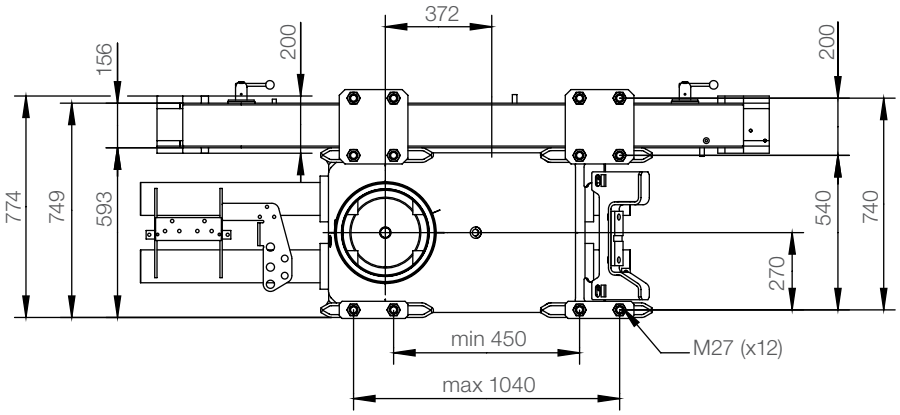

Base with stabilizers B5500

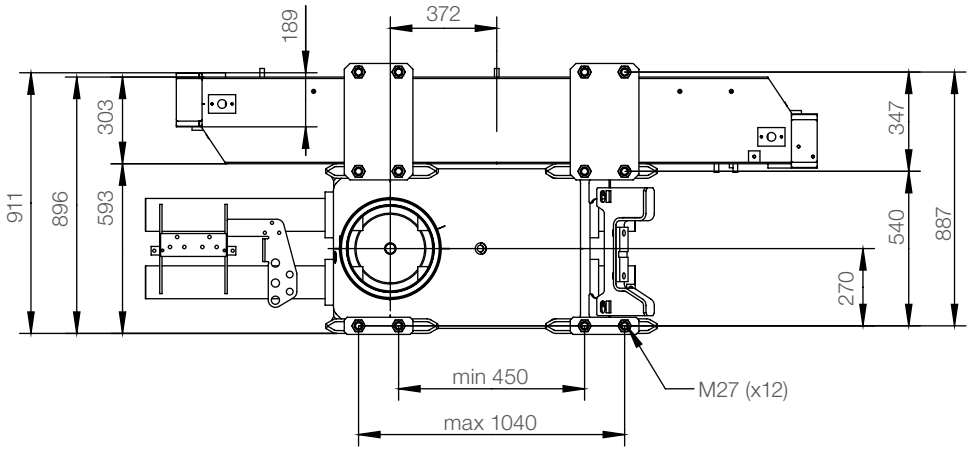

First boom

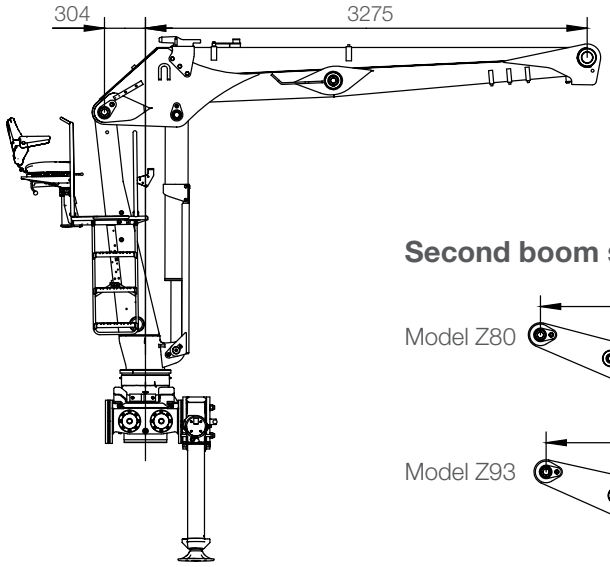

Second boom systems

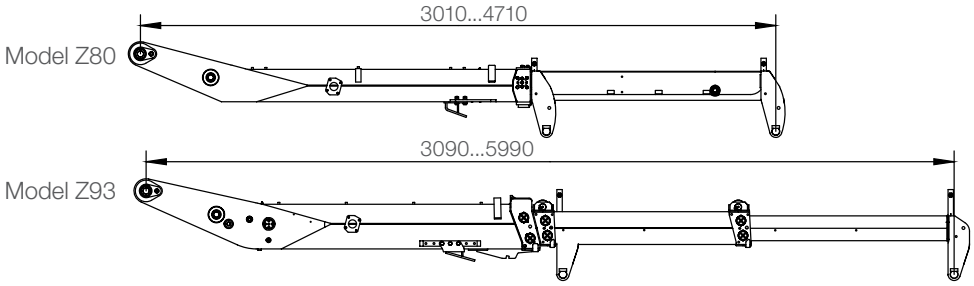

Top seat

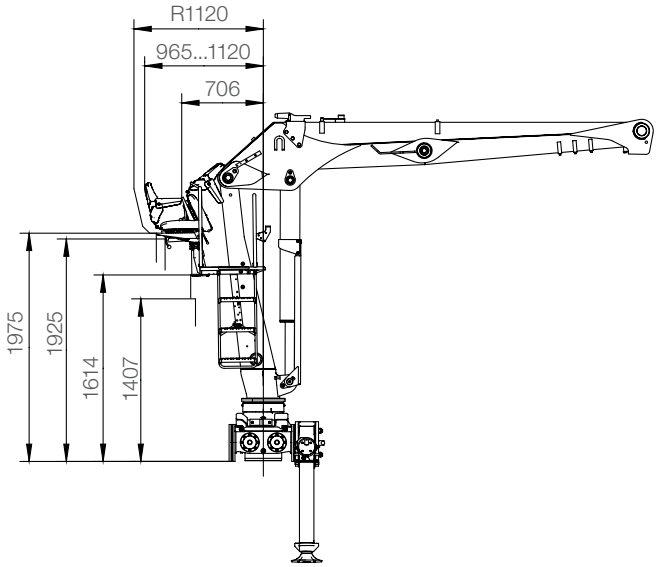

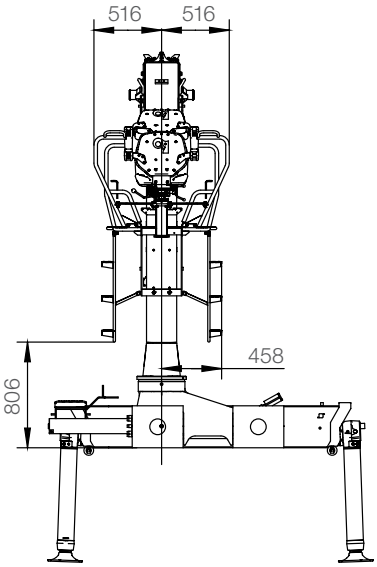

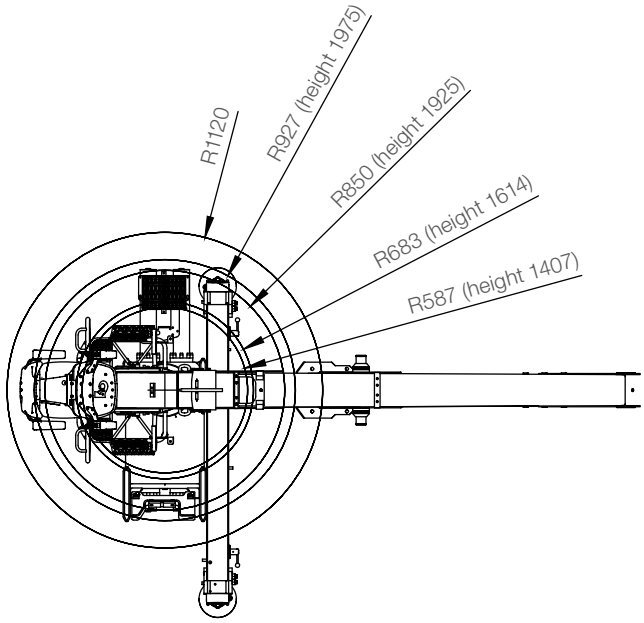

Folded

Model Z80

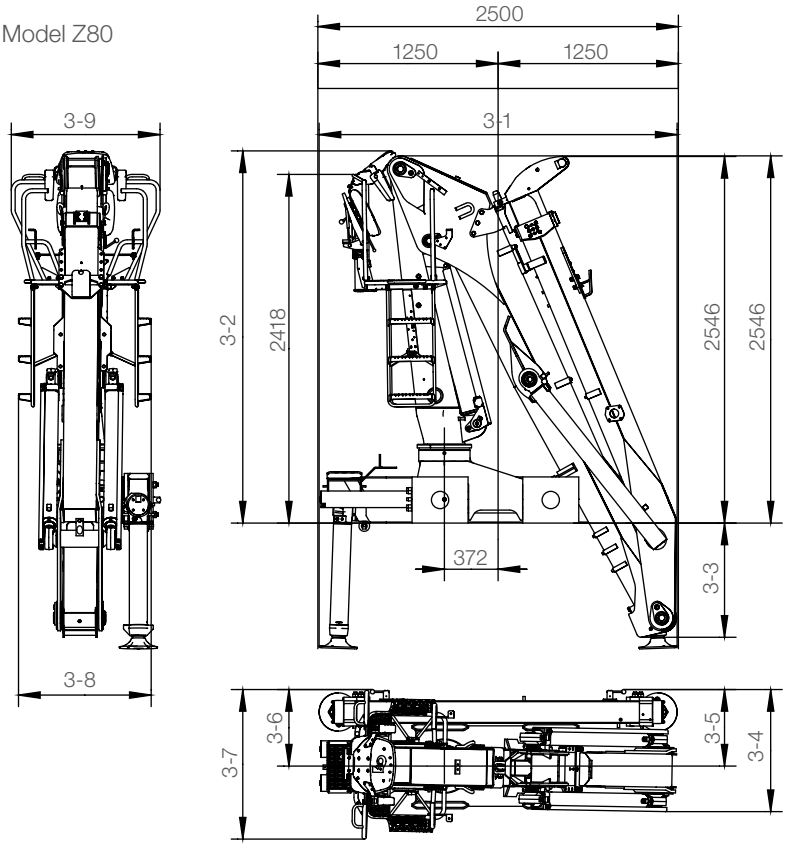

Model Z93

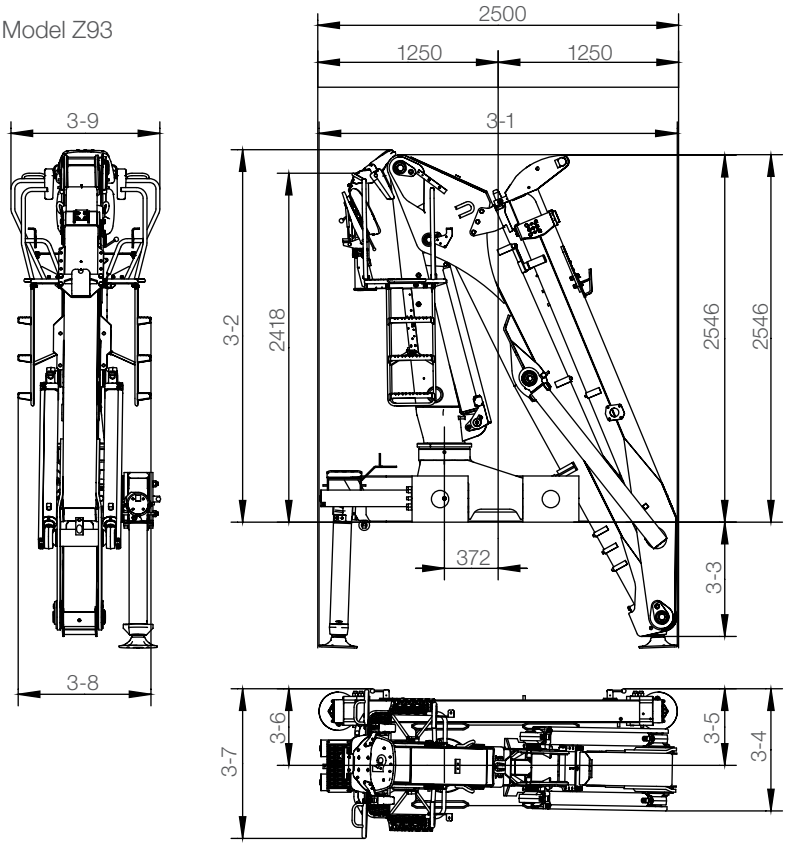

Model	3-1	3-2	3-3	3-4	3-5	3-6	3-7	3-8	3-9	HPL
80	2482	2581	792	847	531	531	1037	920	1032	X
93	2482	2851	791	855	531	531	1031	922	1031	X

BUILT TO PERFORM

Hiab is the world's leading provider of on-road load handling equipment. Customer satisfaction is the first priority for us. Hiab's product range includes HIAB loader cranes, JONSERED recycling and forestry cranes, LOGLIFT forestry cranes, MOFFETT truck mounted forklifts and MULTILIFT demountables, as well as DEL, WALTCO and ZEPRO tail lifts.

hiab.com

Hiab is part of Cargotec.
cargotec.com

© TD-J1620Z-EN-WW_161109

Disclaimer. We reserve the right to make changes. Illustrations, drawings and data are not always in accordance with the latest version or standard model in production. The models in the pictures may present special equipment or colours.

JONSERED